U.S. Embassy Kolonia, Federated States of Micronesia
August 11, 2025

Subject: Request for Quotations number 19FM2025Q0005 - Preventive Maintenance Services for the Photovoltaic Systems at the U.S. Embassy Kolonia

Dear Prospective Quoter:

Enclosed is a Request for Quotations (RFQ) for Preventive Maintenance Services for the Photovoltaic Systems at the U.S. Embassy Kolonia. If you would like to submit quotation, follow the instructions in Section 3 of the solicitation, complete the required portions of the attached document, and submit it to the address shown on the Standard Form 1449 that follows this letter.

The U.S. Government intends to award a contract/purchase order to the responsible company submitting an acceptable offer at the lowest price. We intend to award a contract/purchase order based on initial quotations, without holding discussions, although we may hold discussions with companies in the competitive range if there is a need to do so.

The Embassy intends to conduct a site visit that will be held on **Friday, August 15, 2025, at 10:00 am (Kolonia local time)** at the **U.S. Embassy Kolonia** office. Prospective offerors/quoters should contact Facility Maintenance Supervisor Rommel Lemana via email at LemanaRP@state.gov and MRSS Procurement at MRSSProcurement@state.gov by **August 13, 2025 before 12 noon** to confirm your attendance for the site visit and provide the names of representative/s attending to arrange entry in the project site. Exact address/location will be provided to those who will send confirmation attending the site visit.

Quotations are due by **August 26, 2025, at 4:00 pm (Kolonia local time)**. No quotations will be accepted after this time. Proposals must be in English and incomplete proposals will not be accepted.

Your quotation must be submitted electronically to MRSSProcurement@state.gov. It is important to make sure the submission is made in specific size and format; in MS-Word 2007/2010 or MS-Excel 2007/2010 or Adobe Acrobat (pdf) file format. The file size must not exceed 30MB. If the file size should exceed 30MB, the submission must be made in separate files and attached to separate emails with less than 30MB each.

In order for a quotation to be considered, you must also complete and submit the following:

1. SF-1449
2. Section I, Pricing
3. Section 5 Representations and Certifications
4. Additional information as required in Section 3
5. Proof of SAM Registration

Offerors shall be registered in the SAM (System for Award Management) database at https://www.sam.gov prior to submittal of their offer/proposal as prescribed under FAR 4.1102. Failure to be registered at time of proposal submission may deem the offeror's proposal to be considered non-responsible and no further consideration will be given. Therefore, offerors are highly encouraged to register immediately if they are interested in submitting a response to this requirement.

Sincerely,

Mark T Whitehead

Mark T. Whitehead
Contracting Officer

Enclosure: as stated

SOLICITATION/CONTRACT/ORDER FOR COMMERCIAL PRODUCTS AND COMMERCIAL SERVICES

NOTE: OFFEROR TO COMPLETE BLOCKS 12, 17, 23, 24, AND 30.

1. REQUISITION NUMBER: PR15442148

2. CONTRACT NUMBER	3. AWARD/EFFECTIVE DATE	4. ORDER NUMBER	5. SOLICITATION NUMBER	6. SOLICITATION ISSUE DATE
			19FM2025Q0005	8/08/2025

7. FOR SOLICITATION INFORMATION CALL:	a. NAME	b. TELEPHONE NUMBER *(No collect calls)*	8. OFFER DUE DATE/ LOCAL TIME
	MRSS PROCUREMENT		8/22/2025 4pm local time

9. ISSUED BY — CODE

U.S. Embassy Kolonia
Pohnpei, Kolonia
Federated States of Micronesia 96941
ATTN: GSO

10. THIS ACQUISITION IS [X] UNRESTRICTED OR [ ] SET ASIDE: ____ % FOR:

[ ] SMALL BUSINESS
[ ] HUBZONE SMALL BUSINESS
[ ] SERVICE-DISABLED VETERAN-OWNED SMALL BUSINESS (SDVOSB)
[ ] WOMEN-OWNED SMALL BUSINESS (WOSB)
[ ] ECONOMICALLY DISADVANTAGED WOMEN-OWNED SMALL BUSINESS (EDWOSB)
[ ] 8(A)

NORTH AMERICAN INDUSTRY CLASSIFICATION STANDARD (NAICS):

SIZE STANDARD:

11. DELIVERY FOR FREE ON BOARD (FOB) DESTINATION UNLESS BLOCK IS MARKED
[X] SEE SCHEDULE

12. DISCOUNT TERMS

[ ] 13a. THIS CONTRACT IS A RATED ORDER UNDER THE DEFENSE PRIORITIES AND ALLOCATIONS SYSTEM - DPAS (15 CFR 700)

13b. RATING

14. METHOD OF SOLICITATION
[X] REQUEST FOR QUOTE (RFQ) [ ] INVITATION FOR BID (IFB) [ ] REQUEST FOR PROPOSAL (RFP)

15. DELIVER TO — CODE

SEE SCHEDULE

16. ADMINISTERED BY — CODE

SEE SECTION 2 CONTRACT CLAUSES, DOSAR 652.242-70

17a. CONTRACTOR/ OFFEROR — CODE — FACILITY CODE

TELEPHONE NUMBER

[ ] 17b. CHECK IF REMITTANCE IS DIFFERENT AND PUT SUCH ADDRESS IN OFFER

18a. PAYMENT WILL BE MADE BY — CODE

18b. SUBMIT INVOICES TO ADDRESS SHOWN IN BLOCK 18a UNLESS BLOCK BELOW IS CHECKED [ ] SEE ADDENDUM

19. ITEM NUMBER	20. SCHEDULE OF SUPPLIES/SERVICES	21. QUANTITY	22. UNIT	23. UNIT PRICE	24. AMOUNT
1	Preventive Maintenance Services for the Photovoltaic Systems at the U.S. Embassy Kolonia See attached for the details *(Use Reverse and/or Attach Additional Sheets as Necessary)*	1	lot		

25. ACCOUNTING AND APPROPRIATION DATA

26. TOTAL AWARD AMOUNT *(For Government Use Only)*

[X] 27a. SOLICITATION INCORPORATES BY REFERENCE (FEDERAL ACQUISITION REGULATION) FAR 52.212-1, 52.212-4. FAR 52.212-3 AND 52.212-5 ARE ATTACHED. ADDENDA [X] ARE [ ] ARE NOT ATTACHED

[ ] 27b. CONTRACT/PURCHASE ORDER INCORPORATES BY REFERENCE FAR 52.212-4. FAR 52.212-5 IS ATTACHED. ADDENDA [ ] ARE [ ] ARE NOT ATTACHED

[ ] 28. CONTRACTOR IS REQUIRED TO SIGN THIS DOCUMENT AND RETURN ____ COPIES TO ISSUING OFFICE. CONTRACTOR AGREES TO FURNISH AND DELIVER ALL ITEMS SET FORTH OR OTHERWISE IDENTIFIED ABOVE AND ON ANY ADDITIONAL SHEETS SUBJECT TO THE TERMS AND CONDITIONS SPECIFIED

[ ] 29. AWARD OF CONTRACT: REFERENCE _____ OFFER DATED ._____. YOUR OFFER ON SOLICITATION (BLOCK 5), INCLUDING ANY ADDITIONS OR CHANGES WHICH ARE SET FORTH HEREIN, IS ACCEPTED AS TO ITEMS:

30a. SIGNATURE OF OFFEROR/CONTRACTOR

31a. UNITED STATES OF AMERICA *(SIGNATURE OF CONTRACTING OFFICER)*

30b. NAME AND TITLE OF SIGNER *(Type or print)*	30c. DATE SIGNED	31b. NAME OF CONTRACTING OFFICER *(Type or print)*	31c. DATE SIGNED

19. ITEM NUMBER	20. SCHEDULE OF SUPPLIES/SERVICES	21. QUANTITY	22. UNIT	23. UNIT PRICE	24. AMOUNT

32a. QUANTITY IN COLUMN 21 HAS BEEN

☐ RECEIVED ☐ INSPECTED ☐ ACCEPTED, AND CONFORMS TO THE CONTRACT, EXCEPT AS NOTED: _____

32b. SIGNATURE OF AUTHORIZED GOVERNMENT REPRESENTATIVE	32c. DATE	32d. PRINTED NAME AND TITLE OF AUTHORIZED GOVERNMENT REPRESENTATIVE

32e. MAILING ADDRESS OF AUTHORIZED GOVERNMENT REPRESENTATIVE	32f. TELPHONE NUMBER OF AUTHORZED GOVERNMENT REPRESENTATIVE
	32g. EMAIL OF AUTHORIZED GOVERNMENT REPRESENTATIVE

33. SHIP NUMBER	34. VOUCHER NUMBER	35. AMOUNT VERIFIED CORRECT FOR	36. PAYMENT	37. CHECK NUMBER
☐ PARTIAL ☐ FINAL			☐ COMPLETE ☐ PARTIAL ☐ FINAL	

STOCK RECORD (S/R)		40. PAID BY
38. S/R ACCOUNT NUMBER	39. S/R VOUCHER NUMBER	

41a. I CERTIFY THIS ACCOUNT IS CORRECT AND PROPER FOR PAYMENT		42a. RECEIVED BY *(Print)*	
41b. SIGNATURE AND TITLE OF CERTIFYING OFFICER	41c. DATE	42b. RECEIVED AT *(Location)*	
		42c. DATE RECEIVED *(MM/DD/YYYY)*	42d. TOTAL CONTAINERS

TABLE OF CONTENTS

SECTION 1 - THE SCHEDULE

- SF 1449 cover sheet
- Continuation To SF-1449, RFQ Number **19FM2025Q0005**, Prices, Block 23
- Continuation To SF-1449, RFQ Number **19FM2025Q0005**, Schedule Of Supplies/Services, Block 20 Description/Specifications/Work Statement
- Attachment 1 - Description/Specifications/Performance Work Statement, Government Furnished Property

SECTION 2 - CONTRACT CLAUSES

- Contract Clauses
- Addendum to Contract Clauses - FAR and DOSAR Clauses not Prescribed in Part 12

SECTION 3 - SOLICITATION PROVISIONS

- Solicitation Provisions
- Addendum to Solicitation Provisions - FAR and DOSAR Provisions not Prescribed in Part 12

SECTION 4 - EVALUATION FACTORS

- Evaluation Factors
- Addendum to Evaluation Factors - FAR and DOSAR Provisions not Prescribed in Part 12

SECTION 5 - REPRESENTATIONS AND CERTIFICATIONS

- Offeror Representations and Certifications
- Addendum to Offeror Representations and Certifications - FAR and DOSAR Provisions not Prescribed in Part 12

SECTION 1 - THE SCHEDULE
CONTINUATION TO SF-1449
RFQ NUMBER 19FM2025Q0005
PRICES, BLOCK 23

I. PERFORMANCE WORK STATEMENT

A. The purpose of this firm fixed price purchase order is to obtain one-time preventive maintenance services of facility's photovoltaic systems located at the U.S. Embassy Kolonia in accordance with Statement of Work.

B. The contract will be for a one-time preventive maintenance valid for a one-year period from the date of the contract award.

C. QUALITY ASSURANCE AND SURVEILLANCE PLAN (QASP)

This plan provides an effective method to promote satisfactory contractor performance. The QASP provides a method for the Contracting Officer's Representative (COR) to monitor Contractor performance, advise the Contractor of unsatisfactory performance, and notify the Contracting Officer of continued unsatisfactory performance. The Contractor, not the Government, is responsible for management and quality control to meet the terms of the contract. The role of the Government is to monitor quality to ensure that contract standards are achieved.

Performance Objective	**Statement of Work Paragraphs**	**Performance Threshold**
Services. Performs all preventive maintenance services set forth in the statement of work.	Refer to Statement of Work	All required services are performed and no more than one (1) customer complaint is received per month.

1. SURVEILLANCE. The COR will receive and document all complaints from Government personnel regarding the services provided. If appropriate, the COR will send the complaints to the Contractor for corrective action.

2. STANDARD. The performance standard is that the Government receives no more than one (1) customer complaint per month. The COR shall notify the Contracting Officer of the complaints so that the Contracting Officer may take appropriate action to enforce the inspection clause (FAR 52.212.4, Contract Terms and Conditions - Commercial Products and Commercial Services (NOV 2023), if any of the services exceed the standard.

3. PROCEDURES.

(a) If any Government personnel observe unacceptable services, either incomplete work or required services not being performed they should immediately contact the COR.

(b) The COR will complete appropriate documentation to record the complaint.

(c) If the COR determines the complaint is invalid, the COR will advise the complainant. The COR will retain the annotated copy of the written complaint for his/her files.

(d) If the COR determines the complaint is valid, the COR will inform the Contractor and give the Contractor additional time to correct the defect, if additional time is available. The COR shall determine how much time is reasonable.

(e) The COR shall, as a minimum, orally notify the Contractor of any valid complaints.

(f) If the Contractor disagrees with the complaint after investigation of the site and challenges the validity of the complaint, the Contractor will notify the COR. The COR will review the matter to determine the validity of the complaint.

(g) The COR will consider complaints as resolved unless notified otherwise by the complainant.

(h) Repeat customer complaints are not permitted for any services. If a repeat customer complaint is received for the same deficiency during the service period, the COR will contact the Contracting Officer for appropriate action under the Inspection clause.

D. General Liability Insurance

The general liability policy required of the Contractor shall name "the United States of America" as additional insured. The general liability insurance shall be as required by law or as ordinarily obtained in the location of the work. The limit of such insurance shall be as provided by law or sufficient to meet normal and customary claims. The Contractor agrees that the Government shall not be responsible for personal injuries or for damages to Government's property in Contractor's custody, any property of the Contractor, its officers, agents, servants, and employees, or any other person, arising from, and incident to, the Contractor's performance of the work detailed herein. The Contractor shall hold harmless and indemnify the Government from any and all claims arising therefrom, except in the instance of gross negligence on the part of the Government. The Contractor shall submit evidence of general liability insurance within 10 calendar days after award.

II. PRICING

The firm-fixed price shall include all costs associated with providing one-time preventive maintenance services for the photovoltaic systems in accordance with the statement of work, and manufacturer's warranty including all materials, equipment, labor, overhead, profit, insurance, GST (if applicable). No additional sums will be payable for any escalation in the cost

of materials, equipment or labor, or because the Contractor's failure to properly estimate or accurately predict the cost or difficulty of achieving the results required.

CLIN	Description	Quantity	Unit of Measure	Unit Price	Total Amount
1	Preventive Maintenance Services for the Photovoltaic Systems – one time visit	1	year	US $	US $
2	VAT (if applicable)	1	year	US $	US $
3	DBA Insurance	1	year	US $	US $
				GRAND TOTAL	US $

III. VALUE ADDED TAX

VALUE ADDED TAX. Value Added Tax (VAT) is not included in the CLIN rates. Instead, it will be priced as a separate Line Item in the contract and on Invoices. Local law dictates the portion of the contract price that is subject to VAT; this percentage is multiplied only against that portion. It is reflected for each performance period. The portions of the solicitation subject to VAT are:

CONTINUATION TO SF-1449,
RFQ NUMBER **19FM2025Q0005**
SCHEDULE OF SUPPLIES/SERVICES, BLOCK 20
DESCRIPTION/SPECIFICATIONS/WORK STATEMENT

I. STATEMENT OF WORK

The purpose of this firm-fixed price contract is to obtain one-time preventive maintenance services of the facility's photovoltaic systems at the U.S. Government at the United States Embassy Kolonia, Pohnpei, Federated States of Micronesia. The Contractor shall perform preventive maintenance services as described in the Statement of Work, including the elimination of system malfunction or breakdown and to ensure an optimal photovoltaic system performance.

The Contractor shall furnish all administrative, supervision and direct labor personnel that are necessary to accomplish the work in this contract. The minimum requirement of labor shall be two (2) Photovoltaic technicians (one should be the supervisor), three (3) general workers, one (1) KORE certified technician.

Contractor employees shall be on site only for contractual duties and not for other business purposes.

II. GENERAL REQUIREMENTS

The Contractor shall provide the technical labor and materials required to carry out all preventive maintenance as outlined in this SOW. Embassy staff have service manuals for photovoltaic system on-site. The Contractor shall confirm on-site manuals are complete and current and provide the Contracting Officer's Representative (COR) with a listing of any missing or out-of-date manuals. The following items should be in the service manual: plans, elevations, sections and mounting details; details of the equipment assemblies; diagrams for power, signal and control wiring; utility connection and inverter type. The technician shall sign off on every task specified in the Statement of Work and will provide a typewritten copy of their report to the COR or the COR's designate within five business days of each maintenance visit.

The Contractor shall include all planning, administration, and management necessary to assure that all services comply with the contract, the COR's schedules and instructions, and all applicable laws and regulations. The Contractor shall meet all of the standards of performance identified in the contract. The Contractor shall perform all related support functions such as supply, subcontracting, quality control, financial oversight, and maintenance of complete records and files.

III. MANAGEMENT AND SUPERVISION

1. The Contractor shall designate one (1) supervisor technician who shall be responsible for the maintenance services and supervise all other contractor's employees. The supervisory

technician shall be the focal point for the Contractor and shall be the point of contact with U.S. Government personnel. The technician shall have sufficient English language skill to be able to communicate with members of the U.S. Government staff. The technician shall have supervision as his or her sole function.

Required Qualifications of Minimum Labor Personnel (6 technicians):

Supervisor and PV technicians:

- English Language - Ability to communicate in written and spoken form.
- Education and Experience Background: Minimum of a journeyman Electrician, certification required. Minimum of 3 - years' experience with photovoltaic systems or related professional area.

General Workers:

- English Language – Ability to communicate in spoken form.
- Education – Minimum of High School Diploma
- Physical capabilities – Ability to climb ladders, lift minimum of 30lbs, and work in inclement weather conditions

KORE Power Technician:

- KORE Power certification required.

The U.S. Government shall conduct background checks on Contractor-proposed supervisor and personnel. The Contractor shall replace personnel who fail to pass the required background check.

During the entire performance period of this contract, the Contractor shall make no substitutions of supervisor unless the substitution is necessitated by illness, death, or termination of employment. The Contractor shall notify the Contracting Officer within 15 calendar days after the occurrence of any of these events and provide the information required to the Contracting Officer at least 15 days prior to making any permanent substitutions. The Contractor shall provide a detailed explanation of the circumstances necessitating the proposed substitution, complete resume for the proposed substitute, and any additional information requested by the Contracting Officer. The proposed substitute shall possess qualifications comparable to the original supervisors, as well as satisfying any minimum standards set forth elsewhere in the solicitation/contract. The Contracting Officer will notify the Contractor within 15 calendar days after receipt of all required information of the decision on the substitution. This clause will be modified to reflect any changes in key personnel.

2. The Contractor shall maintain schedules. The schedules should take into consideration the hours that the staff can effectively perform their services without placing a burden on the security personnel of the Post. The Contractor shall provide the COR with a detailed plan as to the personnel to be used and the time frame to perform the service.

3. The Contractor shall be responsible for quality control. The Contractor shall perform inspection/Quality checks visits to all work sites on a regular basis. The Contractor shall coordinate these visits with the COR or a designated U.S. Government representative. These visits shall be surprise inspections to those working on the contract.

4. Technical Guidance: ***Only a KORE Power certified technician allowed to maintain the battery portion of the equipment.*** The Contractor shall have the services of a trained and certified technician with experience to give technical guidance to the Contractor's work force and to develop and guide the Contractor's programs for preventive maintenance of PV equipment.

IV. PHOTOVOLTAIC SYSTEM OPERATIONS AND PREVENTIVE MAINTENANCE

1. **General:** The Contractor shall provide all materials, supervision, technical labor, tools, and equipment to perform preventive maintenance. All personnel working in the vicinity shall wear and /or use appropriate safety protection while work is performed. Any questions or injuries shall be brought to the attention of the COR and Occupation Safety and Health Officer (POSHO). The Contractor will provide an SDS to the COR immediately upon delivery of each chemical to be used by Contractor personnel on-site. The SDS copies will be provided to COR for approval. A minimum of 4 technical employees are required to perform these services in a satisfactory manner.

2. **Systems and Components:** The systems and components to be maintained include manufactured photovoltaic unit, Photovoltaic module framing, photovoltaic array construction, Inverters, system overcurrent protections, mounting structures, connection to utility, as well as control and monitoring systems.

a. The Contractor shall provide the COR with a list of necessary parts and materials.
b. The Contractor shall provide a certified KORE Power technician to service the batteries.
c. Preventive maintenance parts (when required) will be purchased by the U.S. Government in a form of a purchase order and provided to the Contractor for installation purposes.
d. Inverter that meets or exceeds manufacturer’s specifications shall be used. Please refer to Attachment 1 - Drawings.
e. Fuses that meet or exceed manufacturer’s specifications shall be used. Please refer to Attachment 1 - Drawings.
f. Photovoltaic panels that meet or exceed manufacturer’s specifications shall be used. Please refer to Attachment 1 - Drawings.
g. Conductors that meet or exceed manufacturer’s specifications shall be used. Please refer to Attachment 1 - Drawings.

3. **Findings by the Contractor:** If any discrepancies are found with the photovoltaic systems that are not covered under this scope of work, the Contractor shall provide the following:

a. Detailed report noting the discrepancy found.

b. Bill of Materials (BOM) to include component name, quantity, part #, and price for any repair material required and material lead time.
c. Price quote for repair labor.

Preventive maintenance parts (when required) will be purchased by the U.S. Government in a form of a purchase order and provided to the Contractor for installation purposes.

V. GENERAL INFORMATION - EQUIPMENT

The Contractor shall perform preventive maintenance as described in this STATEMENT OF WORK. The objective of scheduled preventive maintenance is to eliminate system malfunction, breakdown and optimal photovoltaic system performance.

DESCRIPTION OF EQUIPMENT *:

Solar Equipment
Solar Panels, REC Alpha Series, REC365AA, 1721x1016x30mm – QTY: 616
Solar Inverters, SMA Tripower, CORE1 50-US – QTY: 4
AC Combiner, GE, AD PANELBOARD
Transformer, Larson Electronics, MT-ISX-3P-480Y-112.5KVA-208Y.120N3R
AC Disconnect, Square D, LA400DS
Inverter Switch, GE, SS 600 VAC, 100A, NEMA 3R
Power Analyzer, ACCU Energy, ACCUVIM II
Weather Station, Kip Zonnen, Sensor RT1

Battery Equipment
Batteries, Kore Power, KORE 1
Inverters, Oztech, RS40 – QTY: 4
Control Power Supply, Meanwell, WDR-480-24
DC High Volt Fuse, Littlefuse, SPFJ200
BMS, Kore Power, KORE-1 BMS

VI. GENERAL REQUIREMENTS:

The contractor shall provide the technical labor and materials required to carry out all preventive maintenance as outlined in this SOW. Embassy staff have service manuals for photovoltaic system on-site. The contractor shall confirm on-site manuals are complete and current and provide the Contracting Officer's Representative (COR) with a listing of any missing or out-of-date manuals. The following items should be in the service manual: plans, elevations, sections and mounting details; details of the equipment assemblies; diagrams for power, signal and control wiring; utility connection and inverter type. The technician shall sign off on every task specified in the Statement of Work and will provide a typewritten copy of their report to the COR or the COR's designate within five business days of the maintenance visit.

VII. PHOTOVOLTAIC SYSTEM OPERATIONS AND PREVENTIVE MAINTENANCE

The contractor shall provide all materials, supervision, technical labor, tools, and equipment to perform preventive maintenance. All personnel working in the vicinity shall wear and /or use appropriate safety protection while work is performed. Any questions or injuries **shall** be brought to the attention of the Post COR and Occupation Safety and Health Officer (POSHO). The Contractor will provide an SDS to the COR immediately upon delivery of each chemical to be used by Contractor personnel on-site. The SDS copies will be provided to COR for approval.

The systems and components to be maintained include Manufactured photovoltaic unit, Photovoltaic module framing, photovoltaic array construction, Inverters, system overcurrent protections, mounting structures, connection to utility, as well as control and monitoring systems. The attached equipment list provides details.

1. The contractor shall provide the COR with a list of necessary parts and materials.
2. The contractor shall provide a certified KORE Power technician to service the batteries.
3. Preventive maintenance parts shall be provided at the expense of the U.S. Govt.
   a. Inverter that meets or exceed manufacturer's specifications shall be used.
   b. Fuses that meet or exceed manufacturer's specifications shall be used.
   c. Photovoltaic panels that meet or exceed manufacturer's specifications shall be used.
   d. Conductors that meet or exceed manufacturer's specifications shall be used.
4. A discrepancy report noting all equipment failures or not performing per design output is required to be submitted to the COR and a recommended corrective measure to bring the system back to designed optimization.
   a. Detailed report noting the discrepancy found.
   b. Bill of Materials (BOM) to include component name, quantity, part #, and price for any repair material required and material lead time.
   c. Price quote for repair labor.

VIII. SAFETY & SPECIAL INSTRUCTIONS:

1. Use appropriate personal protective equipment (PPE) when performing work
2. Check all work areas, tools, and equipment to ensure unsafe conditions are eliminated or guarded against.
3. Follow site safety procedures.
4. Schedule maintenance with operating personnel and affected offices (security).
5. Follow approved lockout/tag out procedures.
6. Lockout and disconnect the main power and DC power connection before tightening the main supply lugs to avoid the hazard of electrical shock, which could result in serious personal injury or death.
7. Review and follow the manufacturer's instructions.
8. Record results in the equipment history log.
9. Remove lockout/tag out in accordance with appropriate procedures.
10. Report all incidents and near missed incidents to COR and assist as requested in the investigation and corrective action.

At a minimum, the following work shall be completed:

Notes:

- The contractor shall submit to the COR for review, work sheet/checklist that will be used for performing maintenance service.
- Performance test and output of the system shall be submitted to the COR within 30 days from the date of service.

IX. PERFORMANCE SCHEDULE

Maintenance One-time Service Scope of Work

The purpose of this Scope of Work is to ensure the entire photovoltaic systems for this facility are maintained according to manufacturer's recommendations to ensure the readiness and proper operation of the system. All maintenance requirements are callout in IEC62446-12016 (Photovoltaic (PV) systems – requirement for testing, documentation and maintenance).

1. Conduct visual inspection of photovoltaic system.
   a. Check for evidence damage to photovoltaic panels.
   b. Inspect wiring harness for wear and damage.
   c. Inspect supports damage and stability.
   d. Inspect the system for corrosion.
   e. Inspect inverters and replace them if needed.
   f. Fuses – Inspect and adjust/replace if needed.
   g. Check photovoltaic system to ensure that vegetation is removed or controlled under and over photovoltaic.

2. Panel inspection:
   a. Check each connection for voltage and current output.
   b. Infrared all panels for hot spots on the panel which results in panel failure.
   c. Infrared all cable connections.
   d. Check disconnects for DC system.
   e. Test grounding on each panel should be close to zero or less than 25 ohms.
   f. Two test methods are possible (short circuit test or operational test), and both will provide information on the correct functions of the PV panels.

3. Panel cleaning:
   a. Cleaning of panels to be carried out when panels are cool to avoid thermal shock and damage to the panel. Water (ideally, deionized) at ambient temperatures should only be used.
   b. High pressure hose washing is not permitted and can damage the panels. Standard domestic pressure should be used.
   c. Chemicals or sprays should not be used to clean the panels and can void the warranty.

d. To remove stubborn marks, a soft sponge, microfiber cloth or a soft non-abrasive brush can be used to lightly wipe over the affected area.
e. Care must be taken to not scratch, mark or introduce foreign elements to the glass surface.
f. Rinse the panels until all the loose soiling is washed off. If soiling remains and cannot be removed with the soft cloth method, then IPA (Isopropyl Alcohol) with a concentration of less than 10% may be used. Acid or Alkali detergents must never be used.
g. Panels should be left to air dry, to reduce the risk of scratching the panel surface.

4. DC disconnect cleaning and inspection.
   a. Replace the input filters on the disconnection system.
   b. Inspect fans for proper operations and damage.
   c. Replace the output filters on the disconnection system.
   d. Test output DC system for quick release and break of connection.
   e. Test GFCI system and ensure that the system is protected space.
   f. Polarity of all DC cables shall be verified using suitable test apparatus.

5. Inverters.
   a. Inverter preventive maintenance for each inverter per manufacturer's operating guideline
   b. Clean inverter cabinet air vents
   c. Clean and remove dust from inverter heat sinks per manufacturer requirements.
   d. Check torque marks and re-tighten appropriate wiring connection to design specification torque force per manufacture requirements.
   e. The potential for the system inverter to produce a DC back-feed into PV array circuits shall also be verified. It should also be verified that any back-feed current is lower than the module maximum fuse rating and the string cable ampere rating.
   f. Isolation required to the mains on the AC side.
   g. Verify that the inverter is operating as per the program as designed.
   h. All DC junction boxes (PV generator and PV array boxes) carry a warning label indicating that active parts inside of boxes are fed from the PV array and may still be energized after isolation from the PV inverter and public supply.
   i. Inverter type
      i. AC Module: no DC test or inspection work required.
      ii. Micro inverter: testing of DC circuits is required; inspection of DC works is required.
      iii. Module integrated electronics: Where possible a standard test regime to be followed, manufacturer to be consulted to determine any restrictions to tests, manufacturers to be consulted on pass/fail criteria for tests.
   j. Once polarity is confirmed, cables shall be checked to ensure they are correctly identified and correctly connected into system inverter.

6. Batteries: (***only KORE Power certified technician allowed to maintain this equipment***)
   a. Inspect wires, terminals, and fasteners for corrosion.
   b. Inspect covers properly operate and close to protect equipment.

c. Inspect all RMSC, Modules and Master BMS (MsBMS)

d. Validate all fans are working as expected I.e., battery modules fans should operate at nearly the same speed at the same operating condition.

e. Review data stored on the MsBMS and collect and archive during normal operation of the system.

i. Take note of any other patterns in the trended data from the system.

1. Trends can be used to show if system performance is degrading too fast or if a particular rack within the system is not performing similarly to other racks within the system.

ii. Inspect alarm and fault logs to see if there are alarms or faults occurring regularly in the system indicating a need to replace a particular component.

f. Review torque on all electrical connections.

X. WORKING HOURS

All work shall be performed from Monday through Friday except for the holidays, between the hours of 8:00 am and 5:00 pm. Other hours may be approved by the Contracting Officer's Representative. The Contractor must provide at least 24-hours advance notice to the COR who will consider any deviation from the hours identified above.

XI. PERSONNEL

1. General

The Contractor shall maintain discipline at the site and shall take all reasonable precautions to prevent any unlawful, riotous or disorderly conduct by Contractor employees at the site. The Contractor shall preserve peace and protect persons and property on site. The Government reserves the right to direct the Contractor to remove an employee from the worksite for failure to comply with the standards of conduct. The Contractor shall immediately replace such an employee to maintain continuity of services at no additional costs to the Government.

2. Standard of Conduct

- **Uniforms and Personal Equipment:** The Contractor's employees shall wear clean, matching, neat and complete uniforms including shoes when on duty. All employees shall wear uniforms approved by the Contracting Officer's Representative (COR).

- **Neglect of duties shall not be condoned:** The Contractor shall enforce no sleeping while on duty, unreasonable delays or failures to carry out assigned tasks, conducting personal affairs during duty hours and refusing to render assistance or cooperate in upholding the integrity of the worksite security.

- **Disorderly conduct, use of abusive or offensive language, quarreling, intimidation by words, actions, or fighting shall not be condoned:** Also included is participation in disruptive activities, which interfere with normal and efficient Government operations.

- **Intoxicants and Narcotics:** The Contractor shall not allow its employees while on duty to possess, sell, consume, or be under the influence of intoxicants, drugs or substances that produce similar effects.

- **Criminal Actions:** Contractor employees may be subject to criminal actions as allowed by local law in certain circumstances. These include but are not limited to the following actions:
    - Falsification or unlawful concealment, removal, mutilation, destruction of any official documents or records or concealment of material facts by willful omission from official documents or records.
    - Unauthorized use of Government property, theft, vandalism, or immoral conduct.
    - Unethical or improper use of official authority or credentials.
    - Security violations; or,
    - Organizing or participating in gambling in any form.

3. **Personnel Health Requirements:** All gardening staff shall be in good general health without physical disabilities that would interfere with acceptable performance of their duties. All employees shall be free from communicable diseases.

4. **Key Control:** If the Contractor should receive keys to complete their duties. The Contractor shall receive, secure, issue and account for any keys issued for access to buildings, offices, equipment, gates, etc., for the purposes of this contract. The Contractor shall not duplicate keys without the COR's approval. Where it is determined that the Contractor or its agents have duplicated a key
without permission of the COR, the Contractor shall remove the individual(s) responsible from this contract. If the Contractor has lost any such keys, the Contractor shall immediately notify the COR. In either event, the Contractor shall reimburse the Government for the cost of rekeying that portion of the system.

5. **Notice to the Government of Labor Disputes**
The Contractor shall inform the COR of any actual or potential labor dispute that is delaying or threatening to delay the timely performance of this contract.

6. **Personnel Security**
After award of the contract, the Contractor shall provide the following list of data on each employee who will be working under the contract. The Contractor shall include a list of workers and supervisor assigned to this project. The U.S. Government will run background checks on these individuals. It is anticipated that security checks will take 30 days to perform. The Contractor shall provide the names, biographic data and police clearance on all Contractor's personnel who shall work on this contract. The Government reserves the right to deny access to U.S.-owned and U.S.-operated facilities to any individual.

XII. DELIVERABLES

The following items shall be delivered under this contract:

Description	Date	Deliver To
Evidence of KORE Certification	10 calendar days after the award	COR
Evidence of Insurances – General Liability and DBA	10 calendar days after the award	COR
List of Personnel	2 weeks before the scheduled visit	COR
Provide worksheet/checklist that will be used for the preventive maintenance service for review and concurrence	10 calendar days after the award or at least one month before the scheduled visit	COR
Performance test and output of the system	within 30 days from the date of service	COR
Copy of the report	within 5 calendar days of the maintenance visit	COR

52.212-4 CONTRACT TERMS AND CONDITIONS – COMMERCIAL ITEMS (NOV 2023) IS INCORPORATED BY REFERENCE. (SEE SF-1449, BLOCK 27A)

FAR 52.212-5 Contract Terms and Conditions Required to Implement Statutes or Executive Orders—Commercial Products and Commercial Services (JAN 2025)

(a) The Contractor shall comply with the following Federal Acquisition Regulation (FAR) clauses, which are incorporated in this contract by reference, to implement provisions of law or Executive orders applicable to acquisitions of commercial products and commercial services:
(1) 52.203-19, Prohibition on Requiring Certain Internal Confidentiality Agreements or Statements (Jan 2017) (section 743 of Division E, Title VII, of the Consolidated and Further Continuing Appropriations Act, 2015 (Pub. L. 113-235) and its successor provisions in subsequent appropriations acts (and as extended in continuing resolutions)).
(2) 52.204-23, Prohibition on Contracting for Hardware, Software, and Services Developed or Provided by Kaspersky Lab Covered Entities (Dec 2023) (Section 1634 of Pub. L. 115-91).
(3) 52.204-25, Prohibition on Contracting for Certain Telecommunications and Video Surveillance Services or Equipment. (Nov 2021) (Section 889(a)(1)(A) of Pub. L. 115-232).
(4) 52.209-10, Prohibition on Contracting with Inverted Domestic Corporations (Nov 2015).
(5) 52.232-40, Providing Accelerated Payments to Small Business Subcontractors (Mar 2023) (31 U.S.C. 3903 and 10 U.S.C. 3801).
(6) 52.233-3, Protest After Award (Aug 1996) (31 U.S.C. 3553).
(7) 52.233-4, Applicable Law for Breach of Contract Claim (Oct 2004) (Public Laws 108-77 and 108-78 (19 U.S.C. 3805 note)).

(b) The Contractor shall comply with the FAR clauses in this paragraph (b) that the Contracting Officer has indicated as being incorporated in this contract by reference to implement provisions of law or Executive orders applicable to acquisitions of commercial products and commercial services:
__ (1) 52.203-6, Restrictions on Subcontractor Sales to the Government (Jun 2020), with *Alternate I* (Nov 2021) (41 U.S.C. 4704 and 10 U.S.C. 4655).
__ (2) 52.203-13, Contractor Code of Business Ethics and Conduct (Nov 2021) (41 U.S.C. 3509)).
__ (3) 52.203-15, Whistleblower Protections under the American Recovery and Reinvestment Act of 2009 (Jun 2010) (Section 1553 of Pub. L. 111-5). (Applies to contracts funded by the American Recovery and Reinvestment Act of 2009.)
__ (4) 52.203-17, Contractor Employee Whistleblower Rights (Nov 2023) (41 U.S.C. 4712); this clause does not apply to contracts of DoD, NASA, the Coast Guard, or applicable elements of the intelligence community—see FAR 3.900(a).
_x_ (5) 52.204-10, Reporting Executive Compensation and First-Tier Subcontract Awards (Jun 2020) (Pub. L. 109-282) (31 U.S.C. 6101 note).
__ (6) [Reserved].
__ (7) 52.204-14, Service Contract Reporting Requirements (Oct 2016) (Pub. L. 111-117, section 743 of Div. C).
__ (8) 52.204-15, Service Contract Reporting Requirements for Indefinite-Delivery Contracts (Oct 2016) (Pub. L. 111-117, section 743 of Div. C).

_x_ (9) 52.204-27, Prohibition on a ByteDance Covered Application (Jun 2023) (Section 102 of Division R of Pub. L. 117-328).
__ (10) 52.204-28, Federal Acquisition Supply Chain Security Act Orders—Federal Supply Schedules, Governmentwide Acquisition Contracts, and Multi-Agency Contracts. (Dec 2023) (Pub. L. 115–390, title II).
__ (11)
(i) 52.204-30, Federal Acquisition Supply Chain Security Act Orders—Prohibition. (Dec 2023) (Pub. L. 115–390, title II).
__ (ii) Alternate I (Dec 2023) of 52.204-30.
_x_ (12) 52.209-6, Protecting the Government's Interest When Subcontracting With Contractors Debarred, Suspended, Proposed for Debarment, or Voluntarily Excluded. (Jan 2025) (31 U.S.C. 6101 note).
__ (13) 52.209-9, Updates of Publicly Available Information Regarding Responsibility Matters (Oct 2018) (41 U.S.C. 2313).
__ (14) [Reserved].
__ (15) 52.219-3, Notice of HUBZone Set-Aside or Sole-Source Award (Oct 2022) (15 U.S.C. 657a).
__ (16) 52.219-4, Notice of Price Evaluation Preference for HUBZone Small Business Concerns (Oct 2022) (if the offeror elects to waive the preference, it shall so indicate in its offer) (15 U.S.C. 657a).
__ (17) [Reserved]
__ (18)
(i) 52.219-6, Notice of Total Small Business Set-Aside (Nov 2020) (15 U.S.C. 644).
__ (ii) Alternate I (Mar 2020) of 52.219-6.
__ (19)
(i) 52.219-7, Notice of Partial Small Business Set-Aside (Nov 2020) (15 U.S.C. 644).
__ (ii) Alternate I (Mar 2020) of 52.219-7.
__ (20) 52.219-8, Utilization of Small Business Concerns (Jan 2025)(15 U.S.C. 637(d)(2) and (3)).
__ (21)
(i) 52.219-9, Small Business Subcontracting Plan (Jan 2025) (15 U.S.C. 637(d)(4)).
__ (ii) Alternate I (Nov 2016) of 52.219-9.
__ (iii) Alternate II (Nov 2016) of 52.219-9.
__ (iv) Alternate III (Jun 2020) of 52.219-9.
__ (v) Alternate IV (Jan 2025) of 52.219-9.
__ (22)
(i) 52.219-13, Notice of Set-Aside of Orders (Mar 2020) (15 U.S.C. 644(r)).
__ (ii) Alternate I (Mar 2020) of 52.219-13.
__ (23) 52.219-14, Limitations on Subcontracting (Oct 2022) (15 U.S.C. 657s).
__ (24) 52.219-16, Liquidated Damages—Subcontracting Plan (Sep2021) (15 U.S.C. 637 (d)(4)(F)(i)).
__ (25) 52.219-27, Notice of Set-Aside for, or Sole-Source Award to, Service-Disabled Veteran-Owned Small Business (SDVOSB) Concerns Eligible Under the SDVOSB Program (Feb 2024) (15 U.S.C. 657f).
__ (26)(i) 52.219-28, Postaward Small Business Program Representation (Jan 2025) (15 U.S.C. 632(a)(2)).

__ (ii) Alternate I (Mar 2020) of 52.219-28.
__ (27) 52.219-29, Notice of Set-Aside for, or Sole-Source Award to, Economically Disadvantaged Women-Owned Small Business Concerns (Oct 2022) (15 U.S.C. 637(m)).
__ (28) 52.219-30, Notice of Set-Aside for, or Sole-Source Award to, Women-Owned Small Business Concerns Eligible Under the Women-Owned Small Business Program (Oct 2022) (15 U.S.C. 637(m)).
__ (29) 52.219-32, Orders Issued Directly Under Small Business Reserves (Mar 2020) (15 U.S.C. 644(r)).
__ (30) 52.219-33, Nonmanufacturer Rule (Sep 2021) (15 U.S.C. 637(a)(17)).
__ (31) 52.222-3, Convict Labor (Jun 2003) (E.O.11755).
_x_ (32) 52.222-19, Child Labor—Cooperation with Authorities and Remedies (Jan 2025)(E.O. 13126).
__ (33) 52.222-21, Prohibition of Segregated Facilities (Apr 2015).
__ (34)
(i) 52.222-26, Equal Opportunity (Sep 2016) (E.O.11246).
__ (ii) Alternate I (Feb 1999) of 52.222-26.
__ (35)
(i) 52.222-35, Equal Opportunity for Veterans (Jun 2020) (38 U.S.C. 4212).
__ (ii) Alternate I (Jul 2014) of 52.222-35.
__ (36)
(i) 52.222-36, Equal Opportunity for Workers with Disabilities (Jun 2020) (29 U.S.C. 793).
__ (ii) Alternate I (Jul 2014) of 52.222-36.
__ (37) 52.222-37, Employment Reports on Veterans (Jun 2020) (38 U.S.C. 4212).
__ (38) 52.222-40, Notification of Employee Rights Under the National Labor Relations Act (Dec 2010) (E.O. 13496).
_x_ (39)
(i) 52.222-50, Combating Trafficking in Persons (Nov 2021) (22 U.S.C. chapter 78 and E.O. 13627).
__ (ii) Alternate I (Mar 2015) of 52.222-50 (22 U.S.C. chapter 78 and E.O. 13627).
__ (40) 52.222-54, Employment Eligibility Verification (Jan 2025) (Executive Order 12989). (Not applicable to the acquisition of commercially available off-the-shelf items or certain other types of commercial products or commercial services as prescribed in FAR 22.1803.)
__ (41)
(i) 52.223-9, Estimate of Percentage of Recovered Material Content for EPA–Designated Items (May 2008) (42 U.S.C. 6962(c)(3)(A)(ii)). (Not applicable to the acquisition of commercially available off-the-shelf items.)
__ (ii) Alternate I (May 2008) of 52.223-9 (42 U.S.C. 6962(i)(2)(C)). (Not applicable to the acquisition of commercially available off-the-shelf items.)
__ (42) 52.223-11, Ozone-Depleting Substances and High Global Warming Potential Hydrofluorocarbons (May 2024) (42 U.S.C. 7671, *et seq.*).
__ (43) 52.223-12, Maintenance, Service, Repair, or Disposal of Refrigeration Equipment and Air Conditioners (May 2024) (42 U.S.C. 7671, *et seq.*).
__ (44) 52.223-20, Aerosols (May 2024) (42 U.S.C. 7671, *et seq.*).
__ (45) 52.223-21, Foams (May 2024) (42 U.S.C. 7671, *et seq.*).
_x_ (46) 52.223-23, Sustainable Products and Services (May 2024) (E.O. 14057, 7 U.S.C. 8102, 42 U.S.C. 6962, 42 U.S.C. 8259b, and 42 U.S.C. 7671l).

__ (47)
(i) 52.224-3 Privacy Training (Jan 2017) (5 U.S.C. 552 a).
__ (ii) Alternate I (Jan 2017) of 52.224-3.
__ (48)
(i) 52.225-1, Buy American-Supplies (Oct 2022) (41 U.S.C. chapter 83).
__ (ii) Alternate I (Oct 2022) of 52.225-1.
__ (49)
(i) 52.225-3, Buy American-Free Trade Agreements-Israeli Trade Act (NOV 2023) (19 U.S.C. 3301 note, 19 U.S.C. 2112 note, 19 U.S.C. 3805 note, 19 U.S.C. 4001 note, 19 U.S.C. chapter 29 (sections 4501-4732), Public Law 103-182, 108-77, 108-78, 108-286, 108-302, 109-53, 109-169, 109-283, 110-138, 112-41, 112-42, and 112-43.
__ (ii) Alternate I [Reserved].
__ (iii) Alternate II (Jan 2025) of 52.225-3.
__ (iv) Alternate III (Feb 2024) of 52.225-3.
__ (v) Alternate IV (Oct 2022) of 52.225-3.
__ (50) 52.225-5, Trade Agreements (NOV 2023) (19 U.S.C. 2501, *et seq*., 19 U.S.C. 3301 note).
_x_ (51) 52.225-13, Restrictions on Certain Foreign Purchases (Feb 2021) (E.O.'s, proclamations, and statutes administered by the Office of Foreign Assets Control of the Department of the Treasury).
__ (52) 52.225-26, Contractors Performing Private Security Functions Outside the United States (Oct 2016) (Section 862, as amended, of the National Defense Authorization Act for Fiscal Year 2008; 10 U.S.C. Subtitle A, Part V, Subpart G Note).
__ (53) 52.226-4, Notice of Disaster or Emergency Area Set-Aside (Nov 2007) (42 U.S.C. 5150).
__ (54) 52.226-5, Restrictions on Subcontracting Outside Disaster or Emergency Area (Nov 2007) (42 U.S.C. 5150).
_x_ (55) 52.226-8, Encouraging Contractor Policies to Ban Text Messaging While Driving (May 2024) (E.O. 13513).
__ (56) 52.229-12, Tax on Certain Foreign Procurements (Feb 2021).
_x_ (57) 52.232-29, Terms for Financing of Purchases of Commercial Products and Commercial Services (Nov 2021) (41 U.S.C. 4505, 10 U.S.C. 3805).
__ (58) 52.232-30, Installment Payments for Commercial Products and Commercial Services (Nov 2021) (41 U.S.C. 4505, 10 U.S.C. 3805).
_x_ (59) 52.232-33, Payment by Electronic Funds Transfer-System for Award Management (Oct2018) (31 U.S.C. 3332).
__ (60) 52.232-34, Payment by Electronic Funds Transfer-Other than System for Award Management (Jul 2013) (31 U.S.C. 3332).
__ (61) 52.232-36, Payment by Third Party (May 2014) (31 U.S.C. 3332).
__ (62) 52.239-1, Privacy or Security Safeguards (Aug 1996) (5 U.S.C. 552a).
_x_ (63) 52.240-1, Prohibition on Unmanned Aircraft Systems Manufactured or Assembled by American Security Drone Act-Covered Foreign Entities (Nov 2024) (Sections 1821-1826, Pub. L. 118-31, 41 U.S.C. 3901 note prec.).
__ (64) 52.242-5, Payments to Small Business Subcontractors (Jan 2017) (15 U.S.C. 637(d)(13)).
__ (65)
(i) 52.247-64, Preference for Privately Owned U.S.-Flag Commercial Vessels (Nov 2021) (46 U.S.C. 55305 and 10 U.S.C. 2631).

__ (ii) Alternate I (Apr 2003) of 52.247-64.
__ (iii) Alternate II (Nov 2021) of 52.247-64.

(c) RESERVED

(d) *Comptroller General Examination of Record*. The Contractor shall comply with the provisions of this paragraph (d) if this contract was awarded using other than sealed bid, is in excess of the simplified acquisition threshold, as defined in FAR 2.101, on the date of award of this contract, and does not contain the clause at 52.215-2, Audit and Records-Negotiation.
(1) The Comptroller General of the United States, or an authorized representative of the Comptroller General, shall have access to and right to examine any of the Contractor's directly pertinent records involving transactions related to this contract.
(2) The Contractor shall make available at its offices at all reasonable times the records, materials, and other evidence for examination, audit, or reproduction, until 3 years after final payment under this contract or for any shorter period specified in FAR subpart 4.7, Contractor Records Retention, of the other clauses of this contract. If this contract is completely or partially terminated, the records relating to the work terminated shall be made available for 3 years after any resulting final termination settlement. Records relating to appeals under the disputes clause or to litigation or the settlement of claims arising under or relating to this contract shall be made available until such appeals, litigation, or claims are finally resolved.
(3) As used in this clause, records include books, documents, accounting procedures and practices, and other data, regardless of type and regardless of form. This does not require the Contractor to create or maintain any record that the Contractor does not maintain in the ordinary course of business or pursuant to a provision of law.

(e) RESERVED

ADD THE FOLLOWING CLAUSE IN FULL TEXT:

52.229-12 TAX ON CERTAIN FOREIGN PROCUREMENTS—NOTICE AND REPRESENTATION (FEB 2021)

(a) *Definitions.* As used in this clause—

Foreign person means any person other than a United States person.

United States person, as defined in 26 U.S.C. 7701(a)(30), means–

(1) A citizen or resident of the United States;

(2) A domestic partnership;

(3) A domestic corporation;

(4) Any estate (other than a foreign estate, within the meaning of 26 U.S.C. 7701(a)(31)); and

(5) Any trust if-

(i) A court within the United States is able to exercise primary supervision over the administration of the trust; and

(ii) One or more United States persons have the authority to control all substantial decisions of the trust.

(b) This clause applies only to foreign persons. It implements 26 U.S.C. 5000C and its implementing regulations at 26 CFR 1.5000C-1 through 1.5000C-7.

(c)

(1) If the Contractor is a foreign person and has only a partial or no exemption to the withholding, the Contractor shall include the Department of the Treasury Internal Revenue Service Form W-14, Certificate of Foreign Contracting Party Receiving Federal Procurement Payments, with each voucher or invoice submitted under this contract throughout the period in which this status is applicable. The excise tax withholding is applied at the payment level, not at the contract level. The Contractor should revise each IRS Form W-14 submission to reflect the exemption (if any) that applies to that particular invoice, such as a different exemption applying. In the absence of a completed IRS Form W-14 accompanying a payment request, the default withholding percentage is 2 percent for the section 5000C withholding for that payment request. Information about IRS Form W-14 and its separate instructions is available via the internet at www.irs.gov/w14.

(2) If the Contractor is a foreign person and has indicated in its offer in the provision 52.229-11, Tax on Certain Foreign Procurements—Notice and Representation, that it is fully exempt from the withholding, and certified the full exemption on the IRS Form W-14, and if that full exemption no longer applies due to a change in circumstances during the performance of the contract that causes the Contractor to become subject to the withholding for the 2 percent excise tax then the Contractor shall–

(i) Notify the Contracting Officer within 30 days of a change in circumstances that causes the Contractor to be subject to the excise tax withholding under 26 U.S.C. 5000C; and

(ii) Comply with paragraph (c)(1) of this clause.

(d) The Government will withhold a full 2 percent of each payment unless the Contractor claims an exemption. If the Contractor enters a ratio in Line 12 of the IRS Form W-14, the result of Line 11 divided by Line 10, the Government will withhold from each payment an amount equal to 2 percent multiplied by the contract ratio. If the Contractor marks box 9 of the IRS

Form W-14 (rather than completes Lines 10 through 12), the Contractor must identify and enter the specific exempt and nonexempt amounts in Line 15 of the IRS Form W-14; the Government will then withhold 2 percent only from the nonexempt amount. See the IRS Form W-14 and its instructions.

(e) Exemptions from the withholding under this clause are described at 26 CFR 1.5000C-1(d)(5) through (7). Any exemption claimed and self-certified on the IRS Form W-14 is subject to audit by the IRS. Any disputes regarding the imposition and collection of the 26 U.S.C. 5000C tax are adjudicated by the IRS as the 26 U.S.C. 5000C tax is a tax matter, not a contract issue.

(f) Taxes imposed under 26 U.S.C. 5000C may not be—

(1) Included in the contract price; nor

(2) Reimbursed.

(g) A taxpayer may, for a fee, seek advice from the Internal Revenue Service (IRS) as to the proper tax treatment of a transaction. This is called a private letter ruling. Also, the IRS may publish a revenue ruling, which is an official interpretation by the IRS of the Internal Revenue Code, related statutes, tax treaties, and regulations. A revenue ruling is the conclusion of the IRS on how the law is applied to a specific set of facts. For questions relating to the interpretation of the IRS regulations go to https://www.irs.gov/help/tax-law-questions.

(End of clause)

ADDENDUM TO CONTRACT CLAUSES
FAR AND DOSAR CLAUSES NOT PRESCRIBED IN PART 12

52.252-2 CLAUSES INCORPORATED BY REFERENCE (FEB 1998)

This contract incorporates one or more clauses by reference, with the same force and effect as if they were given in full text. Upon request, the Contracting Officer will make their full text available. In addition, the full text of a clause may be accessed electronically at: Acquisition.gov this address is subject to change.

If the Federal Acquisition Regulation (FAR) is not available at the location indicated above, use the Department of State Acquisition website at e-CFR to see the links to the FAR. You may also use an Internet "search engine" (for example, Google, Yahoo or Excite) to obtain the latest location of the most current FAR.

THE FOLLOWING FEDERAL ACQUISITION REGULATIONS (FAR) CLAUSES ARE INCORPORATED BY REFERENCE:

CLAUSE	TITLE AND DATE
52.203-17	CONTRACTOR EMPLOYEE WHISTLEBLOWER RIGHTS (NOV 2023)
52.204-9	PERSONAL IDENTITY VERIFICATION OF CONTRACTOR PERSONNEL (JAN 2011)
52.204-13	SYSTEM FOR AWARD MANAGEMENT MAINTENANCE (OCT 2018)
52.204-18	COMMERCIAL AND GOVERNMENT ENTITY CODE MAINTENANCE (AUG 2020)
52.204-25	PROHIBITION ON CONTRACTING FOR CERTAIN TELECOMMUNICATIONS AND VIDEO SURVEILLANCE SERVICES OR EQUIPMENT (NOV 2021)
52.204-27	PROHIBITION ON A BYTEDANCE COVERED APPLICATION (JUN 2023)
52.222-19	CHILD LABOR-COOPERATION WITH AUTHORITIES AND REMEDIES (JAN 2025)
52.225-14	INCONSISTENCY BETWEEN ENGLISH VERSION AND TRANSLATION OF CONTRACT (FEB 2000)
52.228-3	WORKERS' COMPENSATION INSURANCE (DEFENSE BASE ACT) (JUL 2014)
52.228-4	WORKER'S COMPENSATION AND WAR-HAZARD INSURANCE OVERSEAS (APRIL 1984)
52.228-5	INSURANCE - WORK ON A GOVERNMENT INSTALLATION (JAN 1997)
52.229-6	TAXES - FOREIGN FIXED PRICE CONTRACTS (FEB 2013)
52.232-39	UNENFORCEABILITY OF UNAUTHORIZED OBLIGATIONS (JUNE 2013)

52.232-40 PROVIDING ACCELERATED PAYMENTS TO SMALL BUSINESS SUBCONTRACTORS (MAR 2023)

52.244-6 SUBCONTRACTS FOR COMMERCIAL PRODUCTS AND COMMERCIAL SERVICES (JAN 2025)

THE FOLLOWING FAR CLAUSES ARE PROVIDED IN FULL TEXT:

52.217-8 OPTION TO EXTEND SERVICES (NOV 1999)

The Government may require continued performance of any services within the limits and at the rates specified in the contract. The option provision may be exercised more than once, but the total extension of performance hereunder shall not exceed 6 months. The Contracting Officer may exercise the option by written notice to the Contractor within the performance period of the contract.

(End of clause)

52.232-19 AVAILABILITY OF FUNDS FOR THE NEXT FISCAL YEAR (APR 1984)

Funds are not presently available for performance under this contract beyond September 30 of the current calendar year. The Government's obligation for performance of this contract beyond that date is contingent upon the availability of appropriated funds from which payment for contract purposes can be made. No legal liability on the part of the Government for any payment may arise for performance under this contract beyond September 30 of the current calendar year, until funds are made available to the Contracting Officer for performance and until the Contractor receives notice of availability, to be confirmed in writing by the Contracting Officer.

(End of clause)

THE FOLLOWING DOSAR CLAUSES ARE PROVIDED IN FULL TEXT:

652.204-70 DEPARTMENT OF STATE PERSONAL IDENTIFICATION CARD ISSUANCE (FEB 2015)

(a) The Contractor shall comply with the Department of State (DOS) Personal Identification Card Policy and Procedures for all employees performing under this contract who require frequent and continuing access to DOS facilities, or information systems. The Contractor shall insert the substance of this clause in all subcontracts when the subcontractor's employees will require frequent and continuing access to DOS facilities, or information systems.

(b) The DOS Personal Identification Card Policy and Procedures may be accessed at https://www.state.gov/m/ds/rls/rpt/c21664.htm.

(End of clause)

CONTRACTOR IDENTIFICATION (JULY 2008)

Contract performance may require contractor personnel to attend meetings with government personnel and the public, work within government offices, and/or utilize government email.

Contractor personnel must take the following actions to identify themselves as non-federal employees:

1) Use an email signature block that shows name, the office being supported and company affiliation (e.g. "John Smith, Office of Human Resources, ACME Corporation Support Contractor");

2) Clearly identify themselves and their contractor affiliation in meetings;

3) Identify their contractor affiliation in Departmental e-mail and phone listings whenever contractor personnel are included in those listings; and

4) Contractor personnel may not utilize Department of State logos or indicia on business cards.

(End of clause)

652.215-70 EXAMINATION OF RECORDS

(a) With respect to matters related to this contract or a subcontract hereunder, the Department of State Office of the Inspector General, or an authorized representative, shall have upon request: (1) Complete, prompt, and free access to all Contractor and Subcontractor files (in any format), documents, records, data, premises, and employees, except as limited by law; and

(2) The right to interview any current Contractor and Subcontractor personnel, individually and directly, with respect to such matters.

(b) This clause may not be construed to require the contractor or any subcontractor to create or maintain any record that the contractor or subcontractor does not maintain in the ordinary course of business or pursuant to a provision of law.

(c) The Contractor shall insert a clause containing all the terms of this clause, including this paragraph (c), in all subcontracts under this contract other than acquisitions described in Federal Acquisition Regulation 15.209(b)(1).

652.229-70 EXCISE TAX EXEMPTION STATEMENT FOR CONTRACTORS WITHIN THE UNITED STATES (JUL 1988)

This is to certify that the item(s) covered by this contract is/are for export solely for the use of the U.S. Foreign Service Post identified in the contract schedule.

The Contractor shall use a photocopy of this contract as evidence of intent to export. Final proof of exportation may be obtained from the agent handling the shipment. Such proof shall be accepted in lieu of payment of excise tax.

(End of clause)

652.232-70 PAYMENT SCHEDULE AND INVOICE SUBMISSION (FIXED-PRICE) (AUG 1999)

(a) General. The Government shall pay the Contractor as full compensation for all work required, performed, and accepted under this contract the firm fixed-price stated in this contract.

(b) Invoice Submission. The Contractor shall submit invoice/s via email to KoloniaBilling@state.gov as identified in Block 18b of the SF-1449. To constitute a proper invoice, the invoice shall include all the items required by FAR 32.905(e).

The Contractor shall show Value Added Tax (VAT) as a separate item on invoices submitted for payment.

(c) Contractor Remittance Address. The Government will make payment to the contractor's address stated on the cover page of this contract, unless a separate remittance address is shown below:

_____

_____

_____

(End of clause)

652.237-72 OBSERVANCE OF LEGAL HOLIDAYS AND ADMINISTRATIVE LEAVE (FEB 2015)

(a) The Department of State observes the following days as holidays:

New Year's Day
Martin Luther King's Birthday
Washington's Birthday
Memorial Day
Juneteenth
Independence Day
Labor Day
Columbus Day
Veterans Day
Thanksgiving Day
Christmas Day

Any other day designated by Federal law, Executive Order, or Presidential Proclamation.

(b) When New Year's Day, Independence Day, Veterans Day or Christmas Day falls on a Sunday, the following Monday is observed; if it falls on Saturday the preceding Friday is observed. Observance of such days by Government personnel shall not be cause for additional period of performance or entitlement to compensation except as set forth in the contract. If the contractor's personnel work on a holiday, no form of holiday or other premium compensation will be reimbursed either as a direct or indirect cost, unless authorized pursuant to an overtime clause elsewhere in this contract.

(c) When the Department of State grants administrative leave to its Government employees, assigned contractor personnel in Government facilities shall also be dismissed. However, the contractor agrees to continue to provide sufficient personnel to perform round-the-clock requirements of critical tasks already in operation or scheduled, and shall be guided by the instructions issued by the contracting officer or his/her duly authorized representative.

(d) For fixed-price contracts, if services are not required or provided because the building is closed due to inclement weather, unanticipated holidays declared by the President, failure of Congress to appropriate funds, or similar reasons, deductions will be computed as follows:

(1) The deduction rate in dollars per day will be equal to the per month contract price divided by 21 days per month.

(2) The deduction rate in dollars per day will be multiplied by the number of days services are not required or provided.

If services are provided for portions of days, appropriate adjustment will be made by the contracting officer to ensure that the contractor is compensated for services provided.

(e) If administrative leave is granted to contractor personnel as a result of conditions stipulated in any "Excusable Delays" clause of this contract, it will be without loss to the contractor. The cost of salaries and wages to the contractor for the period of any such excused absence shall be a reimbursable item of direct cost hereunder for employees whose regular time is normally charged, and a reimbursable item of indirect cost for employees whose time is normally charged indirectly in accordance with the contractors accounting policy.

(End of clause)

652.242-70 CONTRACTING OFFICER'S REPRESENTATIVE (COR) AUG 1999)

(a) The Contracting Officer may designate in writing one or more Government employees, by name or position title, to take action for the Contracting Officer under this contract. Each designee shall be identified as a Contracting Officer's Representative (COR). Such designation(s) shall specify the scope and limitations of the authority so delegated; provided, that the designee shall not change the terms or conditions of the contract, unless the COR is a warranted Contracting Officer and this authority is delegated in the designation.

(a) The COR for this contract is the Facility Maintenance Supervisor.

(End of clause)

652.242-73 AUTHORIZATION AND PERFORMANCE (AUG 1999)

(a) The Contractor warrants the following:

(1) That is has obtained authorization to operate and do business in the country or countries in which this contract will be performed;

(2) That is has obtained all necessary licenses and permits required to perform this contract; and,

(3) That it shall comply fully with all laws, decrees, labor standards, and regulations of said country or countries during the performance of this contract.

(b) If the party actually performing the work will be a subcontractor or joint venture partner, then such subcontractor or joint venture partner agrees to the requirements of paragraph (a) of this clause.

652.243-70 NOTICES (AUG 1999)

Any notice or request relating to this contract given by either party to the other shall be in writing. Said notice or request shall be mailed or delivered by hand to the other party at the address provided in the schedule of the contract. All modifications to the contract must be made in writing by the Contracting Officer.

SECTION 3 - SOLICITATION PROVISIONS

52.212-1 INSTRUCTIONS TO OFFERORS -- COMMERCIAL PRODUCTS AND COMMERCIAL SERVICES (SEP 2023) IS INCORPORATED BY REFERENCE (SEE SF-1449, BLOCK 27A)

ADDENDUM TO 52.212-1

A. Summary of Instructions. Each offer must consist of the following:

A.1. A completed solicitation, in which the following have been filled out and provided:
(1) SF-1449 cover page (blocks 12, 17, 19-24, and 30 as appropriate)
(2) Section 1, PRICING
(3) Section 5, REPRESENTATIONS AND CERTIFICATIONS
(4) The offeror shall provide proof of SAM registration to include the SAM UEI number.

The Offeror shall include Defense Base Act (DBA) insurance premium costs covering employees. The offeror may obtain DBA insurance directly from any Department of Labor approved providers at the DOL website at *http://www.dol.gov/owcp/dlhwc/lscarrier.htm]*

A.2. Information demonstrating the offeror's/quoter's ability to perform, including:

(1) Resume of the offeror's Project Manager with qualifications in accordance with the Statement of Work.
(2) Evidence that the offeror/quoter operates an established business with a permanent address and telephone listing in the Federated States of Micronesia or plans to establish an office within 30 days of contract award.
(3) List of clients (at least three (3) over the past three (3) years, demonstrating prior experience with relevant past performance information and references to include:

(a) Customer's name, address, current telephone number/s, email address, name of customer's lead contract and technical personnel;
(b) Date of contract award, place(s) of performance, completion dates and contract value of contracts;
(c) Brief description of work, including responsibilities;
(d) Any pending litigation involving labor cases currently in process or occurring within the last three (3) years.

If the offeror has not performed comparable services in the Federated States of Micronesia, then the offeror shall provide its international experience. Offerors are advised that the past performance information requested above may be discussed with the client's contact person. In addition, the client's contact person may be asked to comment on the offeror's:

- Quality of services provided under the contract;
- Compliance with contract terms and conditions;
- Effectiveness of management;

- Willingness to cooperate with and assist the customer in routine matters, and when confronted by unexpected difficulties; and
- Business integrity / business conduct.

The Government will use past performance information primarily to assess an offeror's capability to meet the solicitation performance requirements, including the relevance and successful performance of the offeror's work experience. The Government may also use this data to evaluate the credibility of the offeror's proposal. In addition, the Contracting Officer may use past performance information in making a determination of responsibility.

(4) Evidence that the offeror/quoter can provide the necessary personnel, equipment, and financial resources needed to perform the work;

(5) The offeror shall address its plan to obtain all licenses and permits required by local law (see DOSAR 652.242-73 in Section 2). If offeror already possesses the locally required licenses and permits, a copy shall be provided.

(6) The offeror's strategic plan for the Preventive Maintenance Services for the Photovoltaic Systems at the U.S. Embassy Kolonia to include but not limited to:

(a) A work plan taking into account all work elements in Section 1, Performance Work Statement.
(b) Identify types and quantities of equipment, supplies and materials required for performance of services under this contract. Identify if the offeror already possesses the listed items and their condition for suitability and if not already possessed or inadequate for use how and when the items will be obtained;
(c) Plan of ensuring quality of services including but not limited to contract administration and oversight; and
(d) (1) If insurance is required by the solicitation, a copy of the Certificate of Insurance(s), **or** (2) a statement that the contractor will get the required insurance, and the name of the insurance provider to be used.

ADDENDUM TO SOLICITATION PROVISIONS
FAR AND DOSAR PROVISIONS NOT PRESCRIBED IN PART 12

52.252-1 SOLICITATION PROVISIONS INCORPORATED BY REFERENCE (FEB 1998)

This solicitation incorporates one or more solicitation provisions by reference, with the same force and effect as if they were given in full text. Upon request, the Contracting Officer will make their full text available. In addition, the full text of a clause may be accessed electronically at Acquisition.gov this address is subject to change.

If the Federal Acquisition Regulation (FAR) is not available at the location indicated above, use the Department of State Acquisition website at e-CFR to see the links to the FAR. You may also use an Internet "search engine" (for example, Google, Yahoo or Excite) to obtain the latest location of the most current FAR.

THE FOLLOWING FEDERAL ACQUISITION REGULATION SOLICITATION PROVISIONS ARE INCORPORATED BY REFERENCE:

PROVISION TITLE AND DATE

52.204-7 SYSTEM FOR AWARD MANAGEMENT (NOV 2024)

52.204-16 COMMERCIAL AND GOVERNMENT ENTITY CODE REPORTING (AUG 2020)

52.211-1 AVAILABILITY OF SPECIFICATIONS LISTED IN THE GSA INDEX OF FEDERAL SPECIFICATIONS, STANDARDS AND COMMERCIAL ITEM DESCRIPTIONS, FPMR PART 101-29 (SEP 2023)

52.212-1 INSTRUCTIONS TO OFFERORS -- COMMERCIAL PRODUCTS AND COMMERCIAL SERVICES (SEP 2023)

52.214-34 SUBMISSION OF OFFERS IN THE ENGLISH LANGUAGE (APR 1991)

52.237-1 SITE VISIT (APR 1984)

The site visit will be held on August 15, 2025, at 10:00 am (local time) at U.S. Embassy Kolonia. Prospective offerors/quoters should contact MRSS Procurement at MRSSProcurement@state.gov and Rommel Lemana at LemanaRP@state.gov for instructions and additional information or to arrange entry to the building.

THE FOLLOWING DOSAR PROVISION(S) IS/ARE PROVIDED IN FULL TEXT:

652.206-70 ADVOCATE FOR COMPETITION/OMBUDSMAN (FEB 2015)

(a) The Department of State's Advocate for Competition is responsible for assisting industry in removing restrictive requirements from Department of State solicitations and removing barriers to full and open competition and use of commercial items. If such a solicitation is considered competitively restrictive or does not appear properly conducive to competition and commercial

practices, potential offerors are encouraged first to contact the contracting office for the solicitation. If concerns remain unresolved, contact:

(1) For solicitations issued by the Office of Acquisition Management (A/GA/AMD) or a Regional Procurement Support Office, the A/GA/AMD Advocate for Competition, at AQMCompetitionAdvocate@state.gov.

(2) For all others, the Department of State Advocate for Competition at cat@state.gov.

(b) The Department of State's Acquisition Ombudsman has been appointed to hear concerns from potential offerors and contractors during the pre-award and post-award phases of this acquisition. The role of the ombudsman is not to diminish the authority of the contracting officer, the Technical Evaluation Panel or Source Evaluation Board, or the selection official. The purpose of the ombudsman is to facilitate the communication of concerns, issues, disagreements, and recommendations of interested parties to the appropriate Government personnel, and work to resolve them. When requested and appropriate, the ombudsman will maintain strict confidentiality as to the source of the concern. The ombudsman does not participate in the evaluation of proposals, the source selection process, or the adjudication of formal contract disputes. Interested parties are invited to contact the contracting activity ombudsman, Vincent Mut-Tracy, at +691 320-2187. For an American Embassy or overseas post, refer to the numbers below for the Department Acquisition Ombudsman. Concerns, issues, disagreements, and recommendations which cannot be resolved at a contracting activity level may be referred to the Department of State Acquisition Ombudsman at (703) 516-1696 or write to: Department of State, Acquisition Ombudsman, Office of Global Acquisitions (A/GA), Suite 1060, SA-15, Washington, DC 20520.
(End of provision)

SECTION 4 - EVALUATION FACTORS

- Award will be made to the lowest priced, acceptable, responsible offeror. The quoter shall submit a completed solicitation, including Sections 1 and 5.

- The Government reserves the right to reject proposals that are unreasonably low or high in price.

- The lowest price will be determined by multiplying the offered prices times the estimated quantities in “Prices - Continuation of SF-1449, block 23”, and arriving at a grand total, including all options.

- The Government will determine acceptability by assessing the offeror's compliance with the terms of the RFQ **to include the technical information required by Section 3.**

- The Government will determine contractor responsibility by analyzing whether the apparent successful offeror complies with the requirements of FAR 9.1, including:

    - Adequate financial resources or the ability to obtain them;
    - Ability to comply with the required performance period, taking into consideration all existing commercial and governmental business commitments;
    - Satisfactory record of integrity and business ethics;
    - Necessary organization, experience, and skills or the ability to obtain them;
    - Necessary equipment and facilities or the ability to obtain them; and
    - Be otherwise qualified and eligible to receive an award under applicable laws and regulations.

ADDENDUM TO EVALUATION FACTORS
FAR AND DOSAR PROVISION(S) NOT PRESCRIBED IN PART 12

THE FOLLOWING FAR PROVISION(S) IS/ARE PROVIDED IN FULL TEXT:

52.217-5 EVALUATION OF OPTIONS (JUL 1990)

The Government will evaluate offers for award purposes by adding the total price for all options to the total price for the basic requirement. Evaluation of options will not obligate the Government to exercise the option(s).

52.204-24 REPRESENTATION REGARDING CERTAIN TELECOMMUNICATIONS AND VIDEO SURVEILLANCE SERVICES OR EQUIPMENT (NOV 2021)

The Offeror shall not complete the representation at paragraph (d)(1) of this provision if the Offeror has represented that it "does not provide covered telecommunications equipment or services as a part of its offered products or services to the Government in the performance of any contract, subcontract, or other contractual instrument" in paragraph (c)(1) in the provision at 52.204-26, Covered Telecommunications Equipment or Services—Representation, or in paragraph (v)(2)(i) of the provision at 52.212-3, Offeror Representations and Certifications-Commercial Products or Commercial Services. The Offeror shall not complete the representation in paragraph (d)(2) of this provision if the Offeror has represented that it "does not use covered telecommunications equipment or services, or any equipment, system, or service that uses covered telecommunications equipment or services" in paragraph (c)(2) of the provision at 52.204-26, or in paragraph (v)(2)(ii) of the provision at 52.212-3.

(a) *Definitions.* As used in this provision—

Backhaul, covered telecommunications equipment or services, critical technology, interconnection arrangements, reasonable inquiry, roaming, and substantial or essential component have the meanings provided in the clause 52.204-25, Prohibition on Contracting for Certain Telecommunications and Video Surveillance Services or Equipment.

(b) *Prohibition*.

(1) Section 889(a)(1)(A) of the John S. McCain National Defense Authorization Act for Fiscal Year 2019 (Pub. L. 115-232) prohibits the head of an executive agency on or after August 13, 2019, from procuring or obtaining, or extending or renewing a contract to procure or obtain, any equipment, system, or service that uses covered telecommunications equipment or services as a substantial or essential component of any system, or as critical technology as part of any system. Nothing in the prohibition shall be construed to—

(i) Prohibit the head of an executive agency from procuring with an entity to provide a service that connects to the facilities of a third-party, such as backhaul, roaming, or interconnection arrangements; or

(ii) Cover telecommunications equipment that cannot route or redirect user data traffic or cannot permit visibility into any user data or packets that such equipment transmits or otherwise handles.

(2) Section 889(a)(1)(B) of the John S. McCain National Defense Authorization Act for Fiscal Year 2019 (Pub. L. 115-232) prohibits the head of an executive agency on or after August 13, 2020, from entering into a contract or extending or renewing a contract with an entity that uses any equipment, system, or service that uses covered telecommunications equipment or services as a substantial or essential component of any system, or as critical technology as part of any system. This prohibition applies to the use of covered telecommunications equipment or services, regardless of whether that use is in performance of work under a Federal contract. Nothing in the prohibition shall be construed to—

(i) Prohibit the head of an executive agency from procuring with an entity to provide a service that connects to the facilities of a third-party, such as backhaul, roaming, or interconnection arrangements; or

(ii) Cover telecommunications equipment that cannot route or redirect user data traffic or cannot permit visibility into any user data or packets that such equipment transmits or otherwise handles.

(c) *Procedures.* The Offeror shall review the list of excluded parties in the System for Award Management (SAM) (https://www.sam.gov) for entities excluded from receiving federal awards for "covered telecommunications equipment or services".

(d) *Representation.* The Offeror represents that—

(1) It □ will, □ will not provide covered telecommunications equipment or services to the Government in the performance of any contract, subcontract or other contractual instrument resulting from this solicitation. The Offeror shall provide the additional disclosure information required at paragraph (e)(1) of this section if the Offeror responds "will" in paragraph (d)(1) of this section; and

(2) After conducting a reasonable inquiry, for purposes of this representation, the Offeror represents that—

It □ does, □ does not use covered telecommunications equipment or services, or use any equipment, system, or service that uses covered telecommunications equipment or services. The Offeror shall provide the additional disclosure information required at paragraph (e)(2) of this section if the Offeror responds "does" in paragraph (d)(2) of this section.

(e) *Disclosures.*
(1) Disclosure for the representation in paragraph (d)(1) of this provision. If the Offeror has responded "will" in the representation in paragraph (d)(1) of this provision, the Offeror shall provide the following information as part of the offer:

(i) For covered equipment—

(A) The entity that produced the covered telecommunications equipment (include entity name, unique entity identifier, CAGE code, and whether the entity was the original equipment manufacturer (OEM) or a distributor, if known);

(B) A description of all covered telecommunications equipment offered (include brand; model number, such as OEM number, manufacturer part number, or wholesaler number; and item description, as applicable); and

(C) Explanation of the proposed use of covered telecommunications equipment and any factors relevant to determining if such use would be permissible under the prohibition in paragraph (b)(1) of this provision.

(ii) For covered services—

(A) If the service is related to item maintenance: A description of all covered telecommunications services offered (include on the item being maintained: Brand; model number, such as OEM number, manufacturer part number, or wholesaler number; and item description, as applicable); or

(B) If not associated with maintenance, the Product Service Code (PSC) of the service being provided; and explanation of the proposed use of covered telecommunications services and any factors relevant to determining if such use would be permissible under the prohibition in paragraph (b)(1) of this provision.

(2) Disclosure for the representation in paragraph (d)(2) of this provision. If the Offeror has responded "does" in the representation in paragraph (d)(2) of this provision, the Offeror shall provide the following information as part of the offer:

(i) For covered equipment—

(A) The entity that produced the covered telecommunications equipment (include entity name, unique entity identifier, CAGE code, and whether the entity was the OEM or a distributor, if known);

(B) A description of all covered telecommunications equipment offered (include brand; model number, such as OEM number, manufacturer part number, or wholesaler number; and item description, as applicable); and

(C) Explanation of the proposed use of covered telecommunications equipment and any factors relevant to determining if such use would be permissible under the prohibition in paragraph (b)(2) of this provision.

(ii) For covered services—

(A) If the service is related to item maintenance: A description of all covered telecommunications services offered (include on the item being maintained: Brand; model number, such as OEM number, manufacturer part number, or wholesaler number; and item description, as applicable); or

(B) If not associated with maintenance, the PSC of the service being provided; and explanation of the proposed use of covered telecommunications services and any factors relevant to determining if such use would be permissible under the prohibition in paragraph (b)(2) of this provision.

(End of provision)

52.204-26 COVERED TELECOMMUNICATIONS EQUIPMENT OR SERVICES REPRESENTATION (OCT 2020)

(a) *Definitions.* As used in this provision, “covered telecommunications equipment or services” and “reasonable inquiry” have the meaning provided in the clause 52.204-25, Prohibition on Contracting for Certain Telecommunications and Video Surveillance Services or Equipment.

(b) *Procedures.* The Offeror shall review the list of excluded parties in the System for Award Management (SAM) (*https://www.sam.gov*) for entities excluded from receiving federal awards for “covered telecommunications equipment or services”.

(c) *Representations.* (1) The Offeror represents that it [ ] does, [ ] does not provide covered telecommunications equipment or services as a part of its offered products or services to the Government in the performance of any contract, subcontract, or other contractual instrument.

(2) After conducting a reasonable inquiry for purposes of this representation, the Offeror represents that it [ ] does, [ ] does not use covered telecommunications equipment or services, or any equipment, system, or service that uses covered telecommunications equipment or services.

(End of provision)

These amended representation(s) and/or certification(s) are also incorporated in this offer and are current, accurate, and complete as of the date of this offer. Any changes provided by the offeror are applicable to this solicitation only, and do not result in an update to the representations and certifications posted on SAM.gov. The Contracting Officer must list in paragraph (i)(1) any end products being acquired under this solicitation that are included in the List of Products Requiring Contractor Certification as to Forced or Indentured Child Labor, unless excluded at 22.1503(b). Paragraph (j) does not apply unless the solicitation is predominantly for the acquisition of manufactured end products]

52.212-3 OFFEROR REPRESENTATIONS AND CERTIFICATIONS—COMMERCIAL PRODUCTS AND COMMERCIAL SERVICES (MAY 2024)

The Offeror shall complete only paragraph (b) of this provision if the Offeror has completed the annual representations and certification electronically in the System for Award Management (SAM) accessed through https://www.sam.gov. If the Offeror has not completed the annual representations and certifications electronically, the Offeror shall complete only paragraphs (c) through (v) of this provision.

(a) *Definitions*. As used in this provision—
Covered telecommunications equipment or services has the meaning provided in the clause 52.204-25, Prohibition on Contracting for Certain Telecommunications and Video Surveillance Services or Equipment.
Economically disadvantaged women-owned small business (EDWOSB) concern means a small business concern that is at least 51 percent directly and unconditionally owned by, and the management and daily business operations of which are controlled by, one or more women who are citizens of the United States and who are economically disadvantaged in accordance with 13 CFR part 127, and the concern is certified by SBA or an approved third-party certifier in accordance with 13 CFR 127.300. It automatically qualifies as a women-owned small business eligible under the WOSB Program.
Forced or indentured child labor means all work or service—
(1) Exacted from any person under the age of 18 under the menace of any penalty for its nonperformance and for which the worker does not offer himself voluntarily; or
(2) Performed by any person under the age of 18 pursuant to a contract the enforcement of which can be accomplished by process or penalties.
Highest-level owner means the entity that owns or controls an immediate owner of the offeror, or that owns or controls one or more entities that control an immediate owner of the offeror. No entity owns or exercises control of the highest level owner.
Immediate owner means an entity, other than the offeror, that has direct control of the offeror. Indicators of control include, but are not limited to, one or more of the following: ownership or interlocking management, identity of interests among family members, shared facilities and equipment, and the common use of employees.
Inverted domestic corporation, means a foreign incorporated entity that meets the definition of an inverted domestic corporation under 6 U.S.C. 395(b), applied in accordance with the rules and definitions of 6 U.S.C. 395(c).
Manufactured end product means any end product in product and service codes (PSCs) 1000-9999, except—
(1) PSC 5510, Lumber and Related Basic Wood Materials;
(2) Product or Service Group (PSG) 87, Agricultural Supplies;
(3) PSG 88, Live Animals;
(4) PSG 89, Subsistence;
(5) PSC 9410, Crude Grades of Plant Materials;

(6) PSC 9430, Miscellaneous Crude Animal Products, Inedible;
(7) PSC 9440, Miscellaneous Crude Agricultural and Forestry Products;
(8) PSC 9610, Ores;
(9) PSC 9620, Minerals, Natural and Synthetic; and
(10) PSC 9630, Additive Metal Materials.
Place of manufacture means the place where an end product is assembled out of components, or otherwise made or processed from raw materials into the finished product that is to be provided to the Government. If a product is disassembled and reassembled, the place of reassembly is not the place of manufacture.
Predecessor means an entity that is replaced by a successor and includes any predecessors of the predecessor.
Reasonable inquiry has the meaning provided in the clause 52.204-25, Prohibition on Contracting for Certain Telecommunications and Video Surveillance Services or Equipment.
Restricted business operations means business operations in Sudan that include power production activities, mineral extraction activities, oil-related activities, or the production of military equipment, as those terms are defined in the Sudan Accountability and Divestment Act of 2007 (Pub. L. 110-174). Restricted business operations do not include business operations that the person (as that term is defined in Section 2 of the Sudan Accountability and Divestment Act of 2007) conducting the business can demonstrate—
(1) Are conducted under contract directly and exclusively with the regional government of southern Sudan;
(2) Are conducted pursuant to specific authorization from the Office of Foreign Assets Control in the Department of the Treasury, or are expressly exempted under Federal law from the requirement to be conducted under such authorization;
(3) Consist of providing goods or services to marginalized populations of Sudan;
(4) Consist of providing goods or services to an internationally recognized peacekeeping force or humanitarian organization;
(5) Consist of providing goods or services that are used only to promote health or education; or
(6) Have been voluntarily suspended."Sensitive technology"—
Sensitive technology—
(1) Means hardware, software, telecommunications equipment, or any other technology that is to be used specifically—
(i) To restrict the free flow of unbiased information in Iran; or
(ii) To disrupt, monitor, or otherwise restrict speech of the people of Iran; and
(2) Does not include information or informational materials the export of which the President does not have the authority to regulate or prohibit pursuant to section 203(b)(3)of the International Emergency Economic Powers Act (50 U.S.C. 1702(b)(3)).
Service-disabled veteran-owned small business (SDVOSB) concern means a small business concern—
(1)
(i) Not less than 51 percent of which is owned and controlled by one or more service-disabled veterans or, in the case of any publicly owned business, not less than 51 percent of the stock of which is owned by one or more service-disabled veterans; and
(ii) The management and daily business operations of which are controlled by one or more service-disabled veterans or, in the case of a service-disabled veteran with permanent and severe disability, the spouse or permanent caregiver of such veteran; or
(2) A small business concern eligible under the SDVOSB Program in accordance with 13 CFR part 128 (see subpart 19.14).
(3) *Service-disabled veteran*, as used in this definition, means a veteran as defined in 38 U.S.C. 101(2), with a disability that is service connected, as defined in 38 U.S.C. 101(16), and who is registered in the Beneficiary Identification and Records Locator Subsystem, or successor system that is maintained by the Department of Veterans Affairs' Veterans Benefits Administration, as a service-disabled veteran.

Service-disabled veteran-owned small business (SDVOSB) concern eligible under the SDVOSB Program means an SDVOSB concern that—
(1) Effective January 1, 2024, is designated in the System for Award Management (SAM) as certified by the Small Business Administration (SBA) in accordance with 13 CFR 128.300; or
(2) Has represented that it is an SDVOSB concern in SAM and submitted a complete application for certification to SBA on or before December 31, 2023.
Service-disabled veteran-owned small business (SDVOSB) Program means a program that authorizes contracting officers to limit competition, including award on a sole-source basis, to SDVOSB concerns eligible under the SDVOSB Program.
Small business concern—
(1) Means a concern, including its affiliates, that is independently owned and operated, not dominant in its field of operation, and qualified as a small business under the criteria in 13 CFR part 121 and size standards in this solicitation.
(2) *Affiliates*, as used in this definition, means business concerns, one of whom directly or indirectly controls or has the power to control the others, or a third party or parties control or have the power to control the others. In determining whether affiliation exists, consideration is given to all appropriate factors including common ownership, common management, and contractual relationships. SBA determines affiliation based on the factors set forth at 13 CFR 121.103.
Small disadvantaged business concern, consistent with 13 CFR 124.1001, means a small business concern under the size standard applicable to the acquisition, that—
(1) Is at least 51 percent unconditionally and directly owned (as defined at 13 CFR 124.105) by—
(i) One or more socially disadvantaged (as defined at13 CFR 124.103) and economically disadvantaged (as defined at 13 CFR 124.104) individuals who are citizens of the United States; and
(ii) Each individual claiming economic disadvantage has a net worth not exceeding the threshold at 13 CFR 124.104(c)(2) after taking into account the applicable exclusions set forth at 13 CFR124.104(c)(2); and
(2) The management and daily business operations of which are controlled (as defined at 13.CFR 124.106) by individuals, who meet the criteria in paragraphs (1)(i) and (ii) of this definition.
Subsidiary means an entity in which more than 50 percent of the entity is owned—
(1) Directly by a parent corporation; or
(2) Through another subsidiary of a parent corporation
Successor means an entity that has replaced a predecessor by acquiring the assets and carrying out the affairs of the predecessor under a new name (often through acquisition or merger). The term "successor" does not include new offices/divisions of the same company or a company that only changes its name. The extent of the responsibility of the successor for the liabilities of the predecessor may vary, depending on State law and specific circumstances.
Veteran-owned small business concern means a small business concern—
(1) Not less than 51 percent of which is owned and controlled by one or more veterans (as defined at 38 U.S.C. 101(2)) or, in the case of any publicly owned business, not less than 51 percent of the stock of which is owned by one or more veterans; and
(2) The management and daily business operations of which are controlled by one or more veterans.
Women-owned business concern means a concern which is at least 51 percent owned by one or more women; or in the case of any publicly owned business, at least 51 percent of its stock is owned by one or more women; and whose management and daily business operations are controlled by one or more women
Women-owned small business concern means a small business concern—
(1) That is at least 51 percent owned by one or more women; or, in the case of any publicly owned business, at least51 percent of the stock of which is owned by one or more women; and
(2) Whose management and daily business operations are controlled by one or more women.
Women-owned small business (WOSB) concern eligible under the WOSB Program (in accordance with 13 CFR part 127), means a small business concern that is at least 51 percent directly and

unconditionally owned by, and the management and daily business operations of which are controlled by, one or more women who are citizens of the United States, and the concern is certified by SBA or an approved third-party certifier in accordance with 13 CFR 127.300.

(b)
(1) *Annual Representations and Certifications*. Any changes provided by the Offeror in paragraph (b)(2) of this provision do not automatically change the representations and certifications in SAM.
(2) The offeror has completed the annual representations and certifications electronically in SAM accessed through http://www.sam.gov. After reviewing SAM information, the Offeror verifies by submission of this offer that the representations and certifications currently posted electronically at FAR 52.212-3, Offeror Representations and Certifications-Commercial Products and Commercial Services, have been entered or updated in the last 12 months, are current, accurate, complete, and applicable to this solicitation (including the business size standard(s) applicable to the NAICS code(s) referenced for this solicitation), at the time this offer is submitted and are incorporated in this offer by reference (see FAR 4.1201), except for paragraphs __.
[*Offeror to identify the applicable paragraphs at (c) through (v) of this provision that the offeror has completed for the purposes of this solicitation only, if any.*
These amended representation(s) and/or certification(s) are also incorporated in this offer and are current, accurate, and complete as of the date of this offer.
Any changes provided by the offeror are applicable to this solicitation only, and do not result in an update to the representations and certifications posted electronically on SAM.]

(c) Offerors must complete the following representations when the resulting contract is for supplies to be delivered or services to be performed in the United States or its outlying areas, or when the contracting officer has applied part 19 in accordance with 19.000(b)(1)(ii). Check all that apply.
(1) *Small business concern*. The offeror represents as part of its offer that—
(i) It □ is, □ is not a small business concern; or
(ii) It □ is, □ is not a small business joint venture that complies with the requirements of 13 CFR 121.103(h) and 13 CFR 125.8(a) and (b). [*The offeror shall enter the name and unique entity identifier of each party to the joint venture:* _____.]
(2) *Veteran-owned small business concern*. [*Complete only if the offeror represented itself as a small business concern in paragraph (c)(1) of this provision*.] The offeror represents as part of its offer that it □ is, □ is not a veteran-owned small business concern.
(3) *SDVOSB concern.* [*Complete only if the offeror represented itself as a veteran-owned small business concern in paragraph (c)(2) of this provision.*] The offeror represents that it □ is, □ is not an SDVOSB concern.
(4) *SDVOSB concern joint venture eligible under the SDVOSB Program*. The offeror represents that it □ is, □ is not an SDVOSB joint venture eligible under the SDVOSB Program that complies with the requirements of 13 CFR 128.402. [*Complete only if the offeror represented itself as an SDVOSB concern in paragraph (c)(3) of this provision.*] [*The offeror shall enter the name and unique entity identifier of each party to the joint venture:* _____.]
(5) *Small disadvantaged business concern. [Complete only if the offeror represented itself as a small business concern in paragraph (c)(1) of this provision.]* The offeror represents that it □ is, □ is not a small disadvantaged business concern as defined in 13 CFR 124.1001.
(6) *Women-owned small business concern*. [*Complete only if the offeror represented itself as a small business concern in paragraph (c)(1) of this provision*.] The offeror represents that it □ is, □ is not a women-owned small business concern.
(7) *WOSB joint venture eligible under the WOSB Program.* The offeror represents that it □ is, □ is not a joint venture that complies with the requirements of 13 CFR 127.506(a) through (c). [*The offeror shall enter the name and unique entity identifier of each party to the joint venture:* _____.]

(8) *Economically disadvantaged women-owned small business (EDWOSB) joint venture.* The offeror represents that it □ is, □ is not a joint venture that complies with the requirements of 13 CFR 127.506(a) through (c). [*The offeror shall enter the name and unique entity identifier of each party to the joint venture:* _____.]
Note to paragraphs (c)(9) and (10): Complete paragraphs (c)(9) and (10) only if this solicitation is expected to exceed the simplified acquisition threshold.
(9) *Women-owned business concern (other than small business concern*). [*Complete only if the offeror is a women-owned business concern and did not represent itself as a small business concern in paragraph (c)(1) of this provision*.] The offeror represents that it □ is a women-owned business concern.
(10) *Tie bid priority for labor surplus area concerns*. If this is an invitation for bid, small business offerors may identify the labor surplus areas in which costs to be incurred on account of manufacturing or production (by offeror or first-tier subcontractors) amount to more than 50 percent of the contract price:_____
(11) *HUBZone small business concern*. [*Complete only if the offeror represented itself as a small business concern in paragraph (c)(1) of this provision*.] The offeror represents, as part of its offer, that–
(i) It □ is, □ is not a HUBZone small business concern listed, on the date of this representation, as having been certified by SBA as a HUBZone small business concern in the Dynamic Small Business Search and SAM, and will attempt to maintain an employment rate of HUBZone residents of 35 percent of its employees during performance of a HUBZone contract (see 13 CFR 126.200(e)(1)); and
(ii) It □ is, □ is not a HUBZone joint venture that complies with the requirements of 13 CFR 126.616(a) through (c). [*The offeror shall enter the name and unique entity identifier of each party to the joint venture:* _____.] Each HUBZone small business concern participating in the HUBZone joint venture shall provide representation of its HUBZone status.

(d) Representations required to implement provisions of Executive Order11246-
(1) Previous contracts and compliance. The offeror represents that-
(i) It □ has, □ has not participated in a previous contract or subcontract subject to the Equal Opportunity clause of this solicitation; and
(ii) It □ has, □ has not filed all required compliance reports.
(2) *Affirmative Action Compliance*. The offeror represents that-
(i) It □ has developed and has on file, □ has not developed and does not have on file, at each establishment, affirmative action programs required by rules and regulations of the Secretary of Labor (41 CFR parts 60-1 and 60-2), or
(ii) It □ has not previously had contracts subject to the written affirmative action programs requirement of the rules and regulations of the Secretary of Labor.

(e) *Certification Regarding Payments to Influence Federal Transactions (31 http://uscode.house.gov/ U.S.C. 1352)*. (Applies only if the contract is expected to exceed $150,000.) By submission of its offer, the offeror certifies to the best of its knowledge and belief that no Federal appropriated funds have been paid or will be paid to any person for influencing or attempting to influence an officer or employee of any agency, a Member of Congress, an officer or employee of Congress or an employee of a Member of Congress on his or her behalf in connection with the award of any resultant contract. If any registrants under the Lobbying Disclosure Act of 1995 have made a lobbying contact on behalf of the offeror with respect to this contract, the offeror shall complete and submit, with its offer, OMB Standard Form LLL, Disclosure of Lobbying Activities, to provide the name of the registrants. The offeror need not report regularly employed officers or employees of the offeror to whom payments of reasonable compensation were made.
(f) *Buy American Certificate*. (Applies only if the clause at Federal Acquisition Regulation (FAR) 52.225-1, Buy American-Supplies, is included in this solicitation.)
(1)

(i) The Offeror certifies that each end product, except those listed in paragraph (f)(2) of this provision, is a domestic end product and that each domestic end product listed in paragraph (f)(3) of this provision contains a critical component.
(ii) The Offeror shall list as foreign end products those end products manufactured in the United States that do not qualify as domestic end products. For those foreign end products that do not consist wholly or predominantly of iron or steel or a combination of both, the Offeror shall also indicate whether these foreign end products exceed 55 percent domestic content, except for those that are COTS items. If the percentage of the domestic content is unknown, select “no”.
(iii) The Offeror shall separately list the line item numbers of domestic end products that contain a critical component (see FAR 25.105).
(iv) The terms “commercially available off-the-shelf (COTS) item,” “critical component,” “domestic end product,” "end product," "foreign end product," and "United States" are defined in the clause of this solicitation entitled "Buy American-Supplies."
(2) Foreign End Products:

Line Item No.	Country of Origin
_____	_____
_____	_____
_____	_____

[*List as necessary*]
(3) Domestic end products containing a critical component:
Line Item No. ___
[*List as necessary*]
(4) The Government will evaluate offers in accordance with the policies and procedures of FAR part 25.
(g)
(1) *Buy American-Free Trade Agreements-Israeli Trade Act Certificate*. (Applies only if the clause at FAR 52.225-3, Buy American-Free Trade Agreements-Israeli Trade Act, is included in this solicitation.)
(i)
(A) The Offeror certifies that each end product, except those listed in paragraph (g)(1)(ii) or (iii) of this provision, is a domestic end product and that each domestic end product listed in paragraph (g)(1)(iv) of this provision contains a critical component.
(B) The terms "Bahraini, Moroccan, Omani, Panamanian, or Peruvian end product," "commercially available off-the-shelf (COTS) item," "critical component," "domestic end product," "end product," "foreign end product," "Free Trade Agreement country," "Free Trade Agreement country end product," "Israeli end product," and "United States" are defined in the clause of this solicitation entitled "Buy American-Free Trade Agreements-Israeli Trade Act."
(ii) The Offeror certifies that the following supplies are Free Trade Agreement country end products (other than Bahraini, Moroccan, Omani, Panamanian, or Peruvian end products) or Israeli end products as defined in the clause of this solicitation entitled "Buy American-Free Trade Agreements-Israeli Trade Act."
Free Trade Agreement Country End Products (Other than Bahraini, Moroccan, Omani, Panamanian, or Peruvian End Products) or *Israeli End Products*:

Line Item No.	Country of Origin
_____	_____
_____	_____
_____	_____

[*List as necessary*]
(iii) The Offeror shall list those supplies that are foreign end products (other than those listed in paragraph (g)(1)(ii) of this provision) as defined in the clause of this solicitation entitled "Buy American-Free Trade Agreements-Israeli Trade Act." The Offeror shall list as other foreign end products those end products manufactured in the United States that do not qualify as domestic end products. For those foreign end products that do not consist wholly or predominantly of iron or steel or a combination of both, the Offeror shall also indicate whether these foreign end products exceed 55 percent domestic content, except for those that are COTS items. If the percentage of the domestic content is unknown, select "no".
Other Foreign End Products:

Line Item No.	Country of Origin	Exceeds 55% domestic content (yes/no)
_____	_____	_____
_____	_____	_____
_____	_____	_____

[List as necessary]
(iv) The Offeror shall list the line item numbers of domestic end products that contain a critical component (see FAR 25.105).
Line Item No. ___
[List as necessary]
(v) The Government will evaluate *offers* in accordance with the policies and procedures of FAR part 25.
(2) *Buy American-Free Trade Agreements-Israeli Trade Act Certificate, Alternate II*. If Alternate II to the clause at FAR 52.225-3 is included in this solicitation, substitute the following paragraph (g)(1)(ii) for paragraph (g)(1)(ii) of the basic provision:
(g)(1)(ii) The offeror certifies that the following supplies are Israeli end products as defined in the clause of this solicitation entitled "Buy American—Free Trade Agreements—Israeli Trade Act":
Israeli End Products:

Line Item No.

_____

_____

_____

[*List as necessary*]
(3) *Buy American-Free Trade Agreements-Israeli Trade Act Certificate, Alternate III*. If Alternate III to the clause at 52.225-3 is included in this solicitation, substitute the following paragraphs

(g)(1)(i)(B) and (g)(1)(ii) for paragraphs (g)(1)(i)(B) and (g)(1)(ii) of the basic provision:
(g)(1)(i)(B) The terms "Korean end product", "commercially available off-the-shelf (COTS) item," "critical component," "domestic end product," "end product," "foreign end product," "Free Trade Agreement country," "Free Trade Agreement country end product," "Israeli end product," and "United States" are defined in the clause of this solicitation entitled "Buy American—Free Trade Agreements—Israeli Trade Act."
(g)(1)(ii) The Offeror certifies that the following supplies are Korean end products or Israeli end products as defined in the clause of this solicitation entitled "Buy American—Free Trade Agreements—Israeli Trade Act":
Korean End Products or Israeli End Products:

Line Item No.	Country of Origin
_____	_____
_____	_____
_____	_____

[*List as necessary*]
(4) *Trade Agreements Certificate*. (Applies only if the clause at FAR 52.225-5, Trade Agreements, is included in this solicitation.)
(i) The offeror certifies that each end product, except those listed in paragraph (g)(4)(ii) of this provision, is a U.S.-made or designated country end product, as defined in the clause of this solicitation entitled "Trade Agreements."
(ii) The offeror shall list as other end products those end products that are not U.S.-made or designated country end products.
Other End Products:

Line Item No.	Country of Origin
_____	_____

Line Item No.	Country of Origin
_____	_____
_____	_____

[*List as necessary*]
(iii) The Government will evaluate offers in accordance with the policies and procedures of FAR part 25. For line items covered by the WTO GPA, the Government will evaluate offers of U.S.-made or designated country end products without regard to the restrictions of the Buy American statute. The Government will consider for award only offers of U.S.-made or designated country end products unless the Contracting Officer determines that there are no offers for such products or that the offers for such products are insufficient to fulfill the requirements of the solicitation.

(h) *RESERVED*

(i) *Certification Regarding Knowledge of Child Labor for Listed End Products (Executive Order 13126). [The Contracting Officer must list in paragraph (i)(1) any end products being acquired under this solicitation that are included in the List of Products Requiring Contractor Certification as to Forced or Indentured Child Labor, unless excluded at 22.1503(b).]*
(1) *Listed end products.*

Listed End Product	Listed Countries of Origin
_____	_____
_____	_____

(2) *Certification. [If the Contracting Officer has identified end products and countries of origin in paragraph (i)(1) of this provision, then the offeror must certify to either (i)(2)(i) or (i)(2)(ii) by checking the appropriate block.]*
☐ (i) *The* offeror *will not supply any* end product *listed in paragraph (i)(1) of this provision that was mined, produced, or manufactured in the corresponding country as listed for that product.*
☐ (ii) *The* offeror may *supply an* end product *listed in paragraph (i)(1) of this provision that was mined, produced, or manufactured in the corresponding country as listed for that product. The* offeror *certifies that it has made a good faith effort to determine whether forced or indentured child labor was used to mine, produce, or manufacture any such end product furnished under this contract. On the basis of those efforts, the* offeror *certifies that it is not aware of any such use of child labor.*

(j) *Place of manufacture.* (Does not apply unless the solicitation is predominantly for the acquisition of manufactured end products.) For statistical purposes only, the offeror shall indicate whether the place of manufacture of the end products it expects to provide in response to this solicitation is predominantly-
(1) □ In the United States (Check this box if the total anticipated price of offered end products manufactured in the United States exceeds the total anticipated price of offered end products manufactured outside the United States); or
(2) □ Outside the United States.

(k) *Certificates regarding exemptions from the application of the Service Contract Labor Standards* (Certification by the offeror as to its compliance with respect to the contract also constitutes its certification as to compliance by its subcontractor if it subcontracts out the exempt services.) [*The contracting officer is to check a box to indicate if paragraph (k)(1) or (k)(2) applies.*]
☐ (1) *Maintenance, calibration, or repair of certain equipment as described in FAR* 22.1003-4(c)(1). The offeror □ does □ does not certify that–
(i) The items of equipment to be serviced under this contract are used regularly for other than Governmental purposes and are sold or traded by the offeror (or subcontractor in the case of an exempt subcontract) in substantial quantities to the general public in the course of normal business operations;
(ii) The services will be furnished at prices which are, or are based on, established catalog or market prices (see FAR 22.1003-4(c)(2)(ii)) for the maintenance, calibration, or repair of such equipment; and
(iii) The compensation (wage and fringe benefits) plan for all service employees performing work under the contract will be the same as that used for these employees and equivalent employees servicing the same equipment of commercial customers.
☐ (2) *Certain services as described in FAR* 22.1003-4(d)(1). The offeror □ does □ does not certify that-
(i) The services under the contract are offered and sold regularly to non-Governmental customers, and are provided by the offeror (or subcontractor in the case of an exempt subcontract) to the general public in substantial quantities in the course of normal business operations;
(ii) The contract services will be furnished at prices that are, or are based on, established catalog or market prices (see FAR 22.1003-4(d)(2)(iii));
(iii) Each service employee who will perform the services under the contract will spend only a small portion of his or her time (a monthly average of less than 20 percent of the available hours on an annualized basis, or less than 20 percent of available hours during the contract period if the contract period is less than a month) servicing the Government contract; and
(iv) The compensation (wage and fringe benefits) plan for all service employees performing work under the contract is the same as that used for these employees and equivalent employees servicing commercial customers.
(3) If paragraph (k)(1) or (k)(2) of this clause applies–
(i) If the offeror does not certify to the conditions in paragraph (k)(1) or (k)(2) and the Contracting Officer did not attach a Service Contract Labor Standards wage determination to the solicitation, the offeror shall notify the Contracting Officer as soon as possible; and
(ii) The Contracting Officer may not make an award to the offeror if the offeror fails to execute the certification in paragraph (k)(1) or (k)(2) of this clause or to contact the Contracting Officer as required in paragraph (k)(3)(i) of this clause.

(l) *Taxpayer Identification Number (TIN) (* 26 U.S.C. 6109, 31 U.S.C. 7701). (Not applicable if the offeror is required to provide this information to the SAM to be eligible for award.)
(1) All offerors must submit the information required in paragraphs (l)(3) through (l)(5) of this provision to comply with debt collection requirements of 31 U.S.C. 7701(c) and 3325(d), reporting requirements of 26 U.S.C. 6041, 6041A, and 6050M, and implementing regulations issued by the Internal Revenue Service (IRS).
(2) The TIN may be used by the Government to collect and report on any delinquent amounts arising out of the offeror's relationship with the Government (31 U.S.C. 7701(c)(3)). If the resulting contract is subject to the payment reporting requirements described in FAR 4.904, the TIN provided hereunder may be matched with IRS records to verify the accuracy of the offeror's TIN.
(3) *Taxpayer Identification Number (TIN)*.
☐TIN: _____.
☐TIN has been applied for.
☐TIN is not required because:

☐Offeror is a nonresident alien, foreign corporation, or foreign partnership that does not have income effectively connected with the conduct of a trade or business in the United States and does not have an office or place of business or a fiscal paying agent in the United States;
☐Offeror is an agency or instrumentality of a foreign government;
☐Offeror is an agency or instrumentality of the Federal Government.
(4) *Type of organization*.
☐Sole proprietorship;
☐Partnership;
☐Corporate entity (not tax-exempt);
☐Corporate entity (tax-exempt);
☐Government entity (Federal, State, or local);
☐Foreign government;
☐International organization per 26 CFR1.6049-4;
☐Other _____.
(5) *Common parent*.
☐Offeror is not owned or controlled by a common parent;
☐Name and TIN of common parent:
Name _____.
TIN _____.

(m) *Restricted business operations in Sudan*. By submission of its offer, the offeror certifies that the offeror does not conduct any restricted business operations in Sudan.

(n) Prohibition on Contracting with Inverted Domestic Corporations.
(1) Government agencies are not permitted to use appropriated (or otherwise made available) funds for contracts with either an inverted domestic corporation, or a subsidiary of an inverted domestic corporation, unless the exception at 9.108-2(b) applies or the requirement is waived in accordance with the procedures at 9.108-4.
(2) *Representation*. The Offeror represents that–
(i) It □ is, □ is not an inverted domestic corporation; and
(ii) It □ is, □ is not a subsidiary of an inverted domestic corporation.

(o) Prohibition on contracting with entities engaging in certain activities or transactions relating to Iran.
(1) The offeror shall e-mail questions concerning sensitive technology to the Department of State at CISADA106@state.gov.
(2) *Representation and Certifications*. Unless a waiver is granted or an exception applies as provided in paragraph (o)(3) of this provision, by submission of its offer, the offeror-
(i) Represents, to the best of its knowledge and belief, that the offeror does not export any sensitive technology to the government of Iran or any entities or individuals owned or controlled by, or acting on behalf or at the direction of, the government of Iran;
(ii) Certifies that the offeror, or any person owned or controlled by the offeror, does not engage in any activities for which sanctions may be imposed under section 5 of the Iran Sanctions Act; and
(iii) Certifies that the offeror, and any person owned or controlled by the offeror, does not knowingly engage in any transaction that exceeds the threshold at FAR 25.703-2(a)(2) with Iran's Revolutionary Guard Corps or any of its officials, agents, or affiliates, the property and interests in property of which are blocked pursuant to the International Emergency Economic Powers Act (et seq.) (see OFAC's Specially Designated Nationals and Blocked Persons List at https://www.treasury.gov/resource-center/sanctions/SDN-List/Pages/default.aspx).
(3) The representation and certification requirements of paragraph (o)(2) of this provision do not apply if-
(i) This solicitation includes a trade agreements certification (*e.g.*, 52.212-3(g) or a comparable agency provision); and

(ii) The offeror has certified that all the offered products to be supplied are designated country end products.

(p) *Ownership or Control of Offeror*. (Applies in all solicitations when there is a requirement to be registered in SAM or a requirement to have a unique entity identifier in the solicitation).
(1) The Offeror represents that it □ has or □ does not have an immediate owner. If the Offeror has more than one immediate owner (such as a joint venture), then the Offeror shall respond to paragraph (2) and if applicable, paragraph (3) of this provision for each participant in the joint venture.
(2) If the Offeror indicates "has" in paragraph (p)(1) of this provision, enter the following information:
Immediate owner CAGE code: _____.
Immediate owner legal name: _____.
(Do not use a "doing business as" name)
Is the immediate owner owned or controlled by another entity: □ Yes or □ No.
(3) If the Offeror indicates "yes" in paragraph (p)(2) of this provision, indicating that the immediate owner is owned or controlled by another entity, then enter the following information:
Highest-level owner CAGE code: _____.
Highest-level owner legal name: _____.
(*Do not use a "doing business as" name*)

(q) *Representation by Corporations Regarding Delinquent Tax Liability or a Felony Conviction under any Federal Law.*
(1) As required by sections 744 and 745 of Division E of the Consolidated and Further Continuing Appropriations Act, 2015 (Pub. L. 113-235), and similar provisions, if contained in subsequent appropriations acts, The Government will not enter into a contract with any corporation that–
(i) Has any unpaid Federal tax liability that has been assessed, for which all judicial and administrative remedies have been exhausted or have lapsed, and that is not being paid in a timely manner pursuant to an agreement with the authority responsible for collecting the tax liability, where the awarding agency is aware of the unpaid tax liability, unless an agency has considered suspension or debarment of the corporation and made a determination that suspension or debarment is not necessary to protect the interests of the Government; or
(ii) Was convicted of a felony criminal violation under any Federal law within the preceding 24 months, where the awarding agency is aware of the conviction, unless an agency has considered suspension or debarment of the corporation and made a determination that this action is not necessary to protect the interests of the Government.
(2) The Offeror represents that–
(i) It is □ is not □ a corporation that has any unpaid Federal tax liability that has been assessed, for which all judicial and administrative remedies have been exhausted or have lapsed, and that is not being paid in a timely manner pursuant to an agreement with the authority responsible for collecting the tax liability; and
(ii) It is □ is not □ a corporation that was convicted of a felony criminal violation under a Federal law within the preceding 24 months.

(r) *Predecessor of Offeror.* (Applies in all solicitations that include the provision at 52.204-16, Commercial and Government Entity Code Reporting.)
(1) The Offeror represents that it □ is or □ is not a successor to a predecessor that held a Federal contract or grant within the last three years.
(2) If the Offeror has indicated "is" in paragraph (r)(1) of this provision, enter the following information for all predecessors that held a Federal contract or grant within the last three years (if more than one predecessor, list in reverse chronological order):
Predecessor CAGE code: (or mark "Unknown").
Predecessor legal name:_____.

(*Do not use a "doing business as" name*).

(s) [Reserved].

(t) *Public Disclosure of Greenhouse Gas Emissions and Reduction Goals*. Applies in all solicitations that require offerors to register in SAM (12.301(d)(1)).
(1) This representation shall be completed if the Offeror received $7.5 million or more in contract awards in the prior Federal fiscal year. The representation is optional if the Offeror received less than $7.5 million in Federal contract awards in the prior Federal fiscal year.
(2) Representation. [Offeror to check applicable block(s) in paragraph (t)(2)(i) and (ii)].
(i) The Offeror (itself or through its immediate owner or highest-level owner) □ does, □ does not publicly disclose greenhouse gas emissions, i.e., makes available on a publicly accessible website the results of a greenhouse gas inventory, performed in accordance with an accounting standard with publicly available and consistently applied criteria, such as the Greenhouse Gas Protocol Corporate Standard.
(ii) The Offeror (itself or through its immediate owner or highest-level owner) □ does, □ does not publicly disclose a quantitative greenhouse gas emissions reduction goal, i.e., make available on a publicly accessible website a target to reduce absolute emissions or emissions intensity by a specific quantity or percentage.
(iii) A publicly accessible website includes the Offeror's own website or a recognized, third-party greenhouse gas emissions reporting program.
(3) If the Offeror checked "does" in paragraphs (t)(2)(i) or (t)(2)(ii) of this provision, respectively, the Offeror shall provide the publicly accessible website(s) where greenhouse gas emissions and/or reduction goals are reported:_____.

(u)
(1) In accordance with section 743 of Division E, Title VII, of the Consolidated and Further Continuing Appropriations Act, 2015 (Pub. L. 113-235) and its successor provisions in subsequent appropriations acts (and as extended in continuing resolutions), Government agencies are not permitted to use appropriated (or otherwise made available) funds for contracts with an entity that requires employees or subcontractors of such entity seeking to report waste, fraud, or abuse to sign internal confidentiality agreements or statements prohibiting or otherwise restricting such employees or subcontractors from lawfully reporting such waste, fraud, or abuse to a designated investigative or law enforcement representative of a Federal department or agency authorized to receive such information.
(2) The prohibition in paragraph (u)(1) of this provision does not contravene requirements applicable to Standard Form 312 (Classified Information Nondisclosure Agreement), Form 4414 (Sensitive Compartmented Information Nondisclosure Agreement), or any other form issued by a Federal department or agency governing the nondisclosure of classified information.
(3) *Representation*. By submission of its offer, the Offeror represents that it will not require its employees or subcontractors to sign or comply with internal confidentiality agreements or statements prohibiting or otherwise restricting such employees or subcontractors from lawfully reporting waste, fraud, or abuse related to the performance of a Government contract to a designated investigative or law enforcement representative of a Federal department or agency authorized to receive such information (*e.g.*, agency Office of the Inspector General).

(v) *Covered Telecommunications Equipment or Services-Representation.* Section 889(a)(1)(A) and section 889 (a)(1)(B) of Public Law 115-232.
(1) The Offeror shall review the list of excluded parties in the System for Award Management (SAM) (https://www.sam.gov) for entities excluded from receiving federal awards for "covered telecommunications equipment or services".
(2) The Offeror represents that–

(i) It □ does, □ does not provide covered telecommunications equipment or services as a part of its offered products or services to the Government in the performance of any contract, subcontract, or other contractual instrument.
(ii) After conducting a reasonable inquiry for purposes of this representation, that it □ does, □ does not use covered telecommunications equipment or services, or any equipment, system, or service that uses covered telecommunications equipment or services.

(End of Provision)

Alternate I (Feb 2024). As prescribed in 12.301 (b)(2), add the following paragraph (c)(12) to the basic provision:
(12) (Complete if the offeror has represented itself as disadvantaged in paragraph (c)(5) of this provision.)
□ Black American.
□ Hispanic American.
□ Native American (American Indians, Eskimos, Aleuts, or Native Hawaiians).
□ Asian-Pacific American (persons with origins from Burma, Thailand, Malaysia, Indonesia, Singapore, Brunei, Japan, China, Taiwan, Laos, Cambodia (Kampuchea), Vietnam, Korea, The Philippines, Republic of Palau, Republic of the Marshall Islands, Federated States of Micronesia, the Commonwealth of the Northern Mariana Islands, Guam, Samoa, Macao, Hong Kong, Fiji, Tonga, Kiribati, Tuvalu, or Nauru).
□ Subcontinent Asian (Asian-Indian) American (persons with origins from India, Pakistan, Bangladesh, Sri Lanka, Bhutan, the Maldives Islands, or Nepal).
□ Individual/concern, other than one of the preceding.

52.229-11 TAX ON CERTAIN FOREIGN PROCUREMENTS – NOTICE AND REPRESENTATION (JUN 2020)

(a) *Definitions.* As used in this provision—

Foreign person means any person other than a United States person.

Specified Federal procurement payment means any payment made pursuant to a contract with a foreign contracting party that is for goods, manufactured or produced, or services provided in a foreign country that is not a party to an international procurement agreement with the United States. For purposes of the prior sentence, a foreign country does not include an outlying area.

United States person as defined in 26 U.S.C. 7701(a)(30) means—

(1) A citizen or resident of the United States;

(2) A domestic partnership;

(3) A domestic corporation;

(4) Any estate (other than a foreign estate, within the meaning of 26 U.S.C. 701(a)(31)); and

(5) Any trust if—

(i) A court within the United States is able to exercise primary supervision over the administration of the trust; and

(ii) One or more United States persons have the authority to control all substantial decisions of the trust.

(b) Unless exempted, there is a 2 percent tax of the amount of a specified Federal procurement payment on any foreign person receiving such payment. See 26 U.S.C. 5000C and its implementing regulations at 26 CFR 1.5000C-1 through 1.5000C-7.

(c) Exemptions from withholding under this provision are described at 26 CFR 1.5000C-1(d)(5) through (7). The Offeror would claim an exemption from the withholding by using the Department of the Treasury Internal Revenue Service Form W-14, Certificate of Foreign Contracting Party Receiving Federal Procurement Payments, available via the internet at ***www.irs.gov/w14*** . Any exemption claimed and self-certified on the IRS Form W-14 is subject to audit by the IRS. Any disputes regarding the imposition and collection of the 26 U.S.C. 5000C tax are adjudicated by the IRS as the 26 U.S.C. 5000C tax is a tax matter, not a contract issue. The IRS Form W-14 is provided to the acquiring agency rather than to the IRS.

(d) For purposes of withholding under 26 U.S.C. 5000C, the Offeror represents that—

(1) It [__]is [__]is not a foreign person; and

(2) If the Offeror indicates "is" in paragraph (d)(1) of this provision, then the Offeror represents that—I am claiming on the IRS Form W-14 [____] a full exemption, or [____] partial or no exemption [*Offeror shall select one*] from the excise tax.

(e) If the Offeror represents it is a foreign person in paragraph (d)(1) of this provision, then—

(1) The clause at FAR 52.229-12, Tax on Certain Foreign Procurements, will be included in any resulting contract; and

(2) The Offeror shall submit with its offer the IRS Form W-14. If the IRS Form W-14 is not submitted with the offer, exemptions will not be applied to any resulting contract and the Government will withhold a full 2 percent of each payment.

(f) If the Offeror selects "is" in paragraph (d)(1) and "partial or no exemption" in paragraph (d)(2) of this provision, the Offeror will be subject to withholding in accordance with the clause at FAR 52.229-12, Tax on Certain Foreign Procurements, in any resulting contract.

(g) A taxpayer may, for a fee, seek advice from the Internal Revenue Service (IRS) as to the proper tax treatment of a transaction. This is called a private letter ruling. Also, the IRS may publish a revenue ruling, which is an official interpretation by the IRS of the Internal Revenue Code, related statutes, tax treaties, and regulations. A revenue ruling is the conclusion of the IRS on how the law is applied to a specific set of facts. **For questions relating to the interpretation of the IRS regulations go to *https://www.irs.gov/help/tax-law-questions* .**

(End of provision)

ADDENDUM TO SOLICITATION PROVISIONS
FAR AND DOSAR PROVISIONS NOT PRESCRIBED IN PART 12

THE FOLLOWING FEDERAL ACQUISITION REGULATION SOLICITATION PROVISIONS ARE INCORPORATED BY REFERENCE:

52.225-25 PROHIBITION ON CONTRACTING WITH ENTITIES ENGAGING IN CERTAIN ACTIVITIES OR TRANSACTIONS RELATING TO IRAN—REPRESENTATION AND CERTIFICATIONS (JUN 2020)

ATTACHMENT 1

DRAWINGS

(27 PAGES)

UNCLASSIFIED

SYMBOL	LIGHTING
	LAY-IN OR RECESSED FIXTURE, SIZE ON PLANS
	WALL MOUNT FIXTURE, SIZE ON PLANS
	SURFACE MOUNT FIXTURE, SIZE ON PLANS
	PENDANT OR SURFACE MOUNTED LIGHT FIXTURE, SIZE ON PLANS
	INDIRECT FIXTURE, SIZE ON PLANS
	SHADED FIXTURE INDICATES FIXTURE IS UNSWITCHED AND ALSO INDICATES EMERGENCY POWER OR EMERGENCY BALLAST.
	RECESSED FIXTURE
	SURFACE MOUNTED FIXTURE
	WALL MOUNTED FIXTURE
	WALL WASH OR DIRECTIONAL FIXTURE
	WALL SCONES FIXTURE
	TRACK FIXTURE, SEE PLAN FOR SIZE AND HEADS
	CEILING FAN FIXTURE
	CEILING MOUNT EXIT LIGHT (W/ DIRECTIONAL ARROWS)
	WALL MOUNT EXIT LIGHT (W/ DIRECTIONAL ARROWS)
	1 HEAD REMOTE EMERGENCY LIGHT
	2 HEAD EMERGENCY LIGHT BATTERY PACK
	1 HEAD REMOTE EMERGENCY LIGHT BATTERY PACK
	2 HEAD LIGHT WITH MOTION SENSOR

INTERIOR BOX MOUNTING HEIGHTS

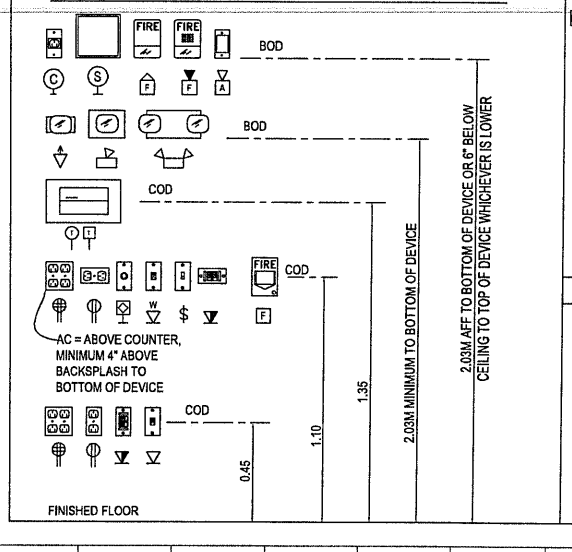

SYMBOL	DEVICES & POWER
$	SWITCH - SPST 2 SINGLE POLE, DOUBLE THROW 3 THREEWAY 4 FOURWAY D DIMMER M MOTOR-RATED OS OCCUPANCY SENSOR P PILOT LIGHT T TIMER SWITCH TS TEST SWITCH VS VACANCY SENSOR W/ DIMMING WP WEATHER PROOF
OS	OCCUPANCY SENSOR SWITCH (CEILING) - SUBSCRIPT IS TYPE
	RECEPTACLE - SIMPLEX
CLG	RECEPTACLE - DUPLEX, MOUNTING IN CEILING
	RECEPTACLE - DUPLEX
	GFI RECEPTACLE - DUPLEX (GROUND FAULT INTERRUPT) WP WEATHER PROOF TR TAMPER RESISTANT D DEVICE RCPT W/ 2 USB PORTS (HUBBELL #USB20X2(X)) IG ISOLATED GROUND
	RECEPTACLE - DOUBLE DUPLEX
	GFI RECEPTACLE - DOUBLE DUPLEX - SAME INDICATORS AS SHOWN FOR DUPLEX RECEPTACLE
	RECEPTACLE - 208V R RANGE - NEMA 14-50R D DRYER - NEMA 10-30R W WELDER - NEMA 14-50R * NEMA CONFIGURATION AS NOTED
	208V RECEPTACLE IN RECESSED FLOORBOX
	DUPLEX RECEPTACLE IN RECESSED FLOORBOX
	DOUBLE DUPLEX RECEPTACLE/GFI IN RECESSED FLOORBOX
J	J-BOX - BOX INDICATES FLOOR MOUNTING -4"X4"X2-1/8" DEEP UNLESS OTHERWISE NOTED
T	THERMOSTAT BY MC, J-BOX & CONDUIT TO CEILING BY EC
$M	MANUAL MOTOR STARTER/DISCONNECT SWITCH
	SPECIAL PURPOSE CONNECTION - BOX INDICATES FLOOR MOUNTING - WORK AS NOTED
	ELECTRIC MOTOR CONNECTION
	DISCONNECT SWITCH
	CIRCUIT BREAKER
	EXISTING PANELBOARD, SURFACE MOUNTED
	EXISTING PANELBOARD, FLUSH MOUNTED
	PANELBOARD, SURFACE MOUNTED
	PANELBOARD, FLUSH MOUNTED
	ELECTRIC METER, BUILDING MOUNTED
	TRANSFORMER

SYMBOL	COMMUNICATIONS
C	CLOCK HANGER RECEPTACLE
	CABLE TV JACK
S	SPEAKER
S	SPEAKER, WALL MOUNTED
E	EXISTING VOICE/DATA OUTLET
3	VOICE/DATA OUTLET - SUBSCRIPT INDICATES NUMBER OF CABLE/JACKS - NO SUBSCRIPT INDICATES 2 CABLES/JACKS
W	VOICE OUTLET WALL MOUNTED
3	VOICE/DATA OUTLET MOUNTED IN FLOORBOX- SUBSCRIPT INDICATES NUMBER OF CABLE/JACKS - NO SUBSCRIPT INDICATES 2 CABLES/JACKS

SYMBOL	ABBREVIATIONS AND MISCELLANEOUS
AC	ABOVE COUNTER, 4" ABOVE BACK SPLASH
ATS	AUTOMATIC TRANSFER SWITCH
AFG	ABOVE FINISHED GRADE
AFF	ABOVE FINISHED FLOOR
BLG	BELOW GRADE
BOD	BOTTOM OF DEVICE
C	CONDUIT
CCTV	CLOSED CIRCUIT TV
CLG	CEILING
COD	CENTER OF DEVICE
CU	COPPER
DVR	DIGITAL VIDEO RECORDER
(E)	EXISTING
EC	ELECTRICAL CONTRACTOR
EF	EXHAUST FAN
GC	GENERAL CONTRACTOR
GND	GROUND
MC	MECHANICAL CONTRACTOR
(N)	NEW
NL	NIGHT LIGHT
PTZ	PAN-TILT-ZOOM
QTY	QUANTITY
(R)	RELOCATED
SF	SURFACE
TC	TEMPERATURE CONTROL CONTRACTOR
TTB	TELEPHONE TERMINAL BOARD
TYP	TYPICAL
UGT	UNDERGROUND TELECOM CONDUIT
UNV	UNIVERSAL VOLTAGE, 120V-277V.
UON	UNLESS OTHERWISE NOTED
W/	WITH
WP	WEATHER PROOF & WATER RESISTANT
XFMR	TRANSFORMER
a,b,c etc.	SWITCH DESIGNATION
BN1L-2,4,6	CIRCUIT DESIGNATION: PANELBOARD - CIRCUITS
1/E5.2	INDICATES DETAIL 1 ON SHEET E5.2
1	SHEET WORK NOTE
	HOME RUN TO PANELS, NUMBER OF ARROWS INDICATES NUMBER OF CIRCUITS
	CONDUIT CONCEALED IN CEILING OR WALL
	CONDUIT CONCEALED UNDER GROUND
	CIRCUIT, NUMBER OF HASH MARKS INDICATES NUMBER OF CONDUCTORS IN CABLE/RACEWAY. GROUND WIRE NOTSHOWN BUT SHALL BE INCLUDED. NO HASH MARKS INDICATES 2 CONDUCTORS PLUS GROUND.

UNCLASSIFIED

United States Department of State
OVERSEAS BUILDINGS OPERATIONS
Washington, D.C.

ENERGY CONSERVATION MEASURES AT U.S. EMBASSY KOLONIA FEDERATED STATES OF MICRONESIA

WARNING: This document is the property of the U.S. Government. Further reproduction and/or distribution is prohibited without the express written permission of: Office of Overseas Buildings Operations, U.S. Department of State, Washington, DC, 20520. Information on this document is not to be altered except with the written approval of the individual whose seal appears hereon.

Rev #	Description	Date

RME Electric Corporation
19160 Smith Road
Aurora, CO 80011, USA

hollingsworth-Pack Corporation
201 Fenniman Rd.
Williamsburg, VA 23185, USA

Global Solace Inc.
20530 Beallsville Rd.
Beallsville, MD 20839, USA
tel 000.000.0000

Release For Construction:
A/OBO/PE/PM | A/OBO/PE/BDE

Drawing Title
LEGENDS
ELECTRICAL

OBO Project Number: 19GE5019C0028
Drawing Scale: NTS
Plane: ☐ 35%(CD1) ☐ 100%(CD3) ☐ 60%(CD1) ☒ 100%(CD2) ☐ 90%(CD2) ☐ IFC
CAD File Name: FSM-GEN-E-CD2.dwg
CAD Plot Scale: 1:1
Date: 2021/01/28
Drawn By: MGO
Checked By: BPA
A/E Project Number: 20-1089
Sheet Number: GEN E0-001

UNCLASSIFIED

GENERAL NOTES:

1. CONSULT OVERSEAS BUILDINGS OPERATIONS (OBO) ENGINEERING BEFORE DEVIATING FROM THIS DRAWING PACKAGE.
2. PRIOR TO COMMENCEMENT OF ANY WORK, THE CONTRACTOR SHALL NOTIFY THE ENGINEER OF ANY DISCREPANCIES NOTED AMONG SITE CONDITIONS, MANUFACTURER RECOMMENDATIONS, OR AUTHORITY HAVING JURISDICTION.
3. ALL WORK SHALL COMPLY WITH REQUIREMENTS OF THE OBO PHOTOVOLTAIC SPECIFICATIONS. ALL FURNISHED AND INSTALLED ELECTRICAL COMPONENTS AND MATERIALS SHALL BE LISTED FOR ITS PURPOSE. CONTRACTOR IS TO INFORM OBO OF ANY EXISTING WORK OR MATERIALS WHICH MAY VIOLATE ANY OF THE ABOVE LAWS AND REGULATIONS. ANY WORK DONE BY THE CONTRACTOR CAUSING SUCH VIOLATION SHALL BE CORRECTED AT CONTRACTORS EXPENSE AND AT NO EXPENSE TO OBO.
4. THE DRAWINGS AND SPECIFICATIONS INDICATE THE INTENT OF THE DESIGN AND SHALL BE CONSIDERED AS DIAGRAMMATIC ONLY, EXACT EQUIPMENT LOCATIONS AND INSTALLATION MEANS SHALL BE DETERMINED AT THE SITE, AS WORK PROGRESSES DIMENSIONS AND CONDITIONS SHALL BE CHECKED AND VERIFIED BY THE CONTRACTOR AT THE SITE. FINAL WORK SHALL BE DOCUMENTED ON AS-BUILT RECORD DRAWINGS.
5. PRIOR TO SUBMISSION OF THE DESIGN, THE CONTRACTOR VISITED THE JOB SITE TO ASCERTAIN THE ACTUAL FIELD CONDITIONS AS THEY RELATE TO THE WORK AS INDICATED ON THE DRAWINGS AND DESCRIBED HEREIN. DISCREPANCIES, IF ANY, SHALL BE BROUGHT TO THE ATTENTION OF OBO PRIOR TO SUBMISSION OF THE BID AND IF NOT RESOLVED TO SATISFACTION, SHALL BE SUBMITTED AS A WRITTEN QUALIFICATION OF THE ABOVE BID. SUBMISSION OF A BID SHALL DE EVIDENCE THAT SITE VERIFICATION HAS BEEN PREFORMED AS DESCRIBED ABOVE.
6. THIS SYSTEM IS INTENDED TO BE OPERATED IN PARALLEL WITH THE UTILITY SERVICE PROVIDER. ANTI-ISLANDING PROTECTION IS A REQUIREMENT OF UL 1741 AND IS INTENDED TO PREVENT THE OPERATION OF THE PV SYSTEM WHEN THE UTILITY GRID IS NOT OPERATIONAL.
7. PERMISSION TO OPERATE THE SYSTEM IS NOT AUTHORIZED UNTIL FINAL INSPECTIONS AND APPROVALS ARE OBTAINED FROM OBO AND THE LOCAL UTILITY SERVICE PROVIDER.
8. ROOF IS TO BE LOADED IN A MANNER PRESCRIBED BY THE STRUCTURAL ENGINEER SO AS NOT TO OVERLOAD ANY PARTICULAR POINT ON THE ROOF.
9. THIS SYSTEM IS INTENDED TO CONNECT TO THE EXISTING FACILITY POWER SYSTEM AT ONE POINT, POINT OF COMMON COUPLING (POCC). THIS CONNECTION SHALL BE IN COMPLIANCE WITH THE NEC ARTICLE 705.12 (A) "POINT OF CONNECTION", SUPPLY SIDE. AS AMENDED BY ARTICLE 705.13, CURRENT LIMITING ALLOWED BY CONTROL SYSTEM.
10. DO NOT SCALE DRAWINGS ALL DIMENSIONS AND LAYOUT SHALL BE FIELD VERIFIED. REPORT ANY DIMENSIONAL CONFLICTS IMMEDIATELY TO OBO.
11. ALL EQUIPMENT WILL BE INSTALLED AS REQUIRED BY APPLICABLE CODES AND THE LOCAL UTILITY COMPANY.

SCOPE OF WORK:

1. THE PROJECT SCOPE INCLUDES THE INSTALLATION OF A 227.92 KW DC RATED GRID TIED PHOTOVOLTAIC SYSTEM AT THE US EMBASSY COMPOUND IN KOLONIA, MICRONESIA ON THE ROOF OF THE CHANCERY BUILDING.
2. REMOVE EXISTING SOLAR MODULES ON THE UTILITY BUILDING ROOF AND THE EXISTING CARPORT AND REPLACE WITH 370W MODULES.
3. INSTALLATION OF A PHOTOVOLTAIC SYSTEM WITH 787 KWH OF BATTERY STORAGE.
4. THE INSTALLATION CONSISTS OF A CHANCERY ROOFTOP SOLAR ARRAY, A CARPORT ARRAY, AN UTILITY BUILDING ARRAY, AND A GROUND MOUNT ARRAY, FOUR INVERTERS AND RELATED ELECTRICAL METERING AND SAFETY EQUIPMENT. ALL EQUIPMENT WILL BE INSTALLED AS REQUIRED BY APPLICABLE CODES AND THE LOCAL UTILITY COMPANY.

WIRING, EQUIPMENT AND INSTALLATION METHODS:

1. EXPOSED PV SOLAR PANEL WIRING WILL BE PV, 1000V RATED, 90 DEGREE C, WET RATED AND UV RESISTANT, ALL EXPOSED CABLES, SUCH AS MODULE LEADS SHALL BE SECURED WITH MECHANICAL OR OTHER SUNLIGHT RESISTANT MEANS.
2. POSITIVE CONDUCTORS ARE RED OR MARKED WITH RED TAPE, NEGATIVE CONDUCTORS ARE BLACK, EQUIPMENT GROUNDING CONDUCTORS ARE GREEN OR BARE (NEC 200.6)
3. ALL FIELD WIRING LARGER THAN 16MM2 THAT IS NOT COLOR CODED SHALL BE TAGGED AT BOTH ENDS WITH PERMANENT WIRE MARKERS TO IDENTIFY POLARITY AND GROUND.
4. ALL AC WIRING SHALL BE COPPER WIRE, TYPE THHN/THWN-2 RATED AT 90 DEGREES C, AND RATED FOR 600V OR APPROVED EQUIVALENT.
5. ALL DC MATERIALS SHALL BE LISTED FOR A MINIMUM OF 1000V DC.
6. ALL OUTDOOR EQUIPMENT SHALL MEET APPROPRIATE NEMA STANDARDS.
7. ALL MOUNTING HARDWARE SHALL BE STAINLESS STEEL FOR PROTECTION FROM ENVIRONMENTAL ELEMENTS.
8. SPLIT BOLT CONNECTORS NOT ALLOWED FOR CONNECTIONS OVER 250V, USE APPROPRIATELY RATED, INSULATED BLOCK CONNECTORS SUCH AS ILSCO POLARIS TYPE AND PIERCING SPLICE KUP-L-TAP TYPE CONNECTORS OR EQUIVALENT FOR SPLICES.
9. ALL ENCLOSURES SHALL HAVE TOUCH UP PAINT APPLIED TO ALL SCRATCHES AND OTHER WEAR AND TEAR THAT MAY HAVE OCCURRED DURING CONSTRUCTION. ALL HARDWARE AND CONNECTORS SHALL BE TORQUED PER DEVICE LISTING OR MANUFACTURERS RECOMMENDATIONS.
10. FURNISH AND INSTALL ALL STEEL SUPPORTING MEMBERS, HANGERS, BRACKETS OR OTHER SPECIAL DETAILS REQUIRED AND NECESSARY FOR THE PROPER INSTALLATION OF ELECTRICAL EQUIPMENT.
11. WHEN ALL WORK UNDER THIS CONTRACT HAS BEEN COMPLETED AS INDICATED ON THE DRAWINGS AND SPECIFIED HEREIN AND IS READY FOR FINAL INSPECTION, THE CONTRACTOR SHALL DEMONSTRATE THAT THE REQUIREMENTS OF THESES SPECIFICATION HAVE BEEN MET TO THE SATISFACTION OF OBO.
12. SCHEDULE 40 PVC CONDUIT USED BELOW GROUND MUST BE ENCASED IN CONCRETE. DIRECT BURIAL PVC MUST BE SCHEDULE 80.

CONDUIT AND RACEWAY:

1. ALL WIRES SHALL BE RUN IN CONDUITS AS SPECIFIED HEREINAFTER, AND EACH LENGTH OF CONDUIT SHALL BEAR THAT MARKERS TRADEMARK OR STAMP. THE PLANS INDICATE GENERAL ROUTING. THE CONDUIT RUNS FOR THESE CIRCUITS MAY BE MODIFIED AT THE TIME OF INSTALLATION TO ADAPT SAME TO BUILDING CONSTRUCTION WITH APPROVAL FROM OBO.
2. CONDUIT SHALL BE SECURELY FASTENED IN PLACE AND HANGERS, SUPPORTS OR FASTENING SHALL BE PROVIDED AT EACH ELBOW AND AT EACH END OF EACH STRAIGHT RUN TERMINATED AT EQUIPMENT. WHERE RISER CONDUITS PIERCE FLOOR SLABS, THEY SHALL REST ON EACH FLOOR WITH APPROVED BEAM CLAMPS, PIPE STRAPS OR HEAVY IRON TIES WIRED TO THE STRUCTURAL MEMBERS SUPPORTING EQUIPMENT. SIZE AND TYPE OF ANCHOR SHALL BE BASED ON THE COMBINED WEIGHTS OF CONDUIT, HANGER AND WIRE.
3. INSTALL CONDUIT EXPANSION FITTINGS IN EACH CONDUIT RUN WHEREVER IT CROSSES AN EXPANSION JOINT AND SHALL HAVE EXPANSION DEFLECTION TYPE FITTINGS AND WHEREVER THE CONDUIT LENGTH EXCEEDS AS ALLOWED IN NEC 342-354.
4. LAY OUT AND INSTALL ALL CONDUIT RUNS TO AVOID PROXIMITY TO STEAM AND HOT WATER PIPES. DO NOT RUN CONDUIT WITHIN THREE INCHES OF SUCH PIPES EXCEPT WHERE CROSSINGS ARE UNAVOIDABLE, THEN THE CONDUIT SHALL BE KEPT AT LEAST 1 INCH FROM THE COVERING OF THE PIPE CROSSING.
5. ALL CONDUITS WILL ENTER ENCLOSURES FROM BELOW OR THE SIDE. ENTRY FROM THE SIDE IS ONLY PERMITTED IF THE ENCLOSURE IS DESIGNED SUCH A WAY AS TO PERMIT WATERTIGHT SIDE OR TOP ENTRY.
6. USE ONLY LISTED RAINTIGHT FITTINGS AND RAINTIGHT CONDUIT HUBS FOR ALL EXTERIOR CONDUIT.
7. FURNISH GROUNDING/BONDING BUSHINGS ONTO ALL CONDUIT ENTERING/LEAVING BOXES.
8. PIPING, CONDUITS AND EQUIPMENT OFF ALL TRADES SHALL BE PROPERLY COORDINATED AND SET TO MAINTAIN THE PROPER CLEARANCES REQUIRED BY APPLICABLE FEDERAL, STATE AND LOCAL CODES.
9. FOR ALL PV SYSTEMS, THE WIRING ENTERING COMBINERS AND OTHER ENCLOSURES SHALL BE FILLED WITH OUTDOOR RATED GLAND FITTINGS OR A DUCT SEAL SEALING COMPOUND OR EQUIVALENT TO STOP INTRUSION INTO THE ENCLOSURE BY PESTS.
10. UNLESS MARKED AS UV RESISTANT, PVC IS NOT APPROVED FOR INSTALLATION IN LOCATIONS SUBJECTED TO DIRECT SUNLIGHT AND SHALL NOT BE EMPLOYED UNLESS PAINTED IN ANY SUCH LOCATION.
11. ZINC AND DIECAST CONDUIT FITTINGS ARE NOT PERMITTED UNLESS SPECIFICALLY APPROVED IN WRITING BY OBO. ALL METALLIC FITTINGS MUST BE FULL COMPRESSION STEEL. POTMETAL / DIECAST FITTINGS ARE NOT ACCEPTABLE.
12. ALL CONDUIT ENTERING COMBINERS, INVERTERS OR OTHER ENCLOSURES WILL HAVE THE INSIDE OF THE CONDUIT SEALED FROM THE INSIDE OF THE ENCLOSURE WITH COMPOUND.
13. ALL CONDUIT FITTINGS AND CONNECTORS SHALL BE OF THE SAME MANUFACTURER AND BE SIMILAR IN STYLE AND DESIGN.
14. ALL CONDUIT TRANSITIONS FROM BELOW GRADE TO ABOVE GRADE SHALL BE RIGID GALVANIZED CONDUIT STARTING AT THE BEGINNING OF THE 90° SWEEP.
15. NEC 344.26, NO MORE THAN 360° OF BENDS BETWEEN PULL POINTS.
16. CONDUIT PENETRATIONS WITH INSIDE AND OUTSIDE TEMPERATURE DIFFERENCES WILL BE SEALED WITH APPROPRIATE FITTINGS AND SEALANT.

GROUNDING:

1. EQUIPMENT GROUNDING CONDUCTORS AND SYSTEM GROUNDING CONDUCTORS WILL HAVE AS SHORT A DISTANCE TO GROUND AS POSSIBLE AND A MINIMUM NUMBER OF TURNS.
2. NON-CURRENT CARRYING METAL PARTS SHALL BE CHECKED FOR PROPER GROUNDING; NOTING THAT TERMINAL LUGS BOLTED ON AN ENCLOSURE'S FINISHED SURFACE MAY BE INSULATED BECAUSE OF PAINT/FINISH. PAINT/FINISH AT POINT OF CONTACT SHALL BE PROPERLY REMOVED.
3. SOLAR MODULES SHALL BE GROUNDED TO THE MOUNTING RAILS WITH APPROVED MOUNTING HARDWARE THAT IS APPROVED AS A GROUND BOND PER UL 2703 AND AS ALLOWED IN 690.43
4. INVERTERS: DC NOT BONDED TO GROUND, DC GFI BUILT IN.
5. GROUNDING OF LIGHTING AND LIGHTNING SYSTEM ARE TO BE APPROVED BASED ON FINAL SYSTEM EQUIPMENT AND LAYOUT.
6. VERIFY EXISTING GEC AND UPGRADE AS NECESSARY AS REQUIRED BY NEC 250.
7. PER OWNER/AHJ DIRECTION, THE COMPOUND ELECTRICAL SYSTEM IS ALLOWED TO HAVE ONE POINT OF N-G CONNECTION EITHER AT THE MAIN COMPOUND TRANSFORMER SECONDARY OR AT THE SYSTEM MAIN DISCONNECT SWITCH (EXCEPT FOR NEW TRANSFORMER GROUND WYE-GROUND).

SYSTEM DESCRIPTION

DESIGN WIND SPEED:	183 KPH	HIGH TEMP:	36°C
EXPOSURE CATEGORY:	D	LOW TEMP:	20°C
MODULE TYPE:	60 CELL MODULES, 368 WATTS, AVG		
QUANTITY:	320 MODULES ON CHANCERY BLDG 56 MODULES ON CARPORT 44 MODULES ON UTILITY BLDG 196 MODULES ON GROUND MOUNT		
SYSTEM SIZE (DC)	117.8 KW ON CHANCERY BLDG 108.9 KW ON OTHER STRUCTURES 226.7 TOTAL		
HEIGHT:	CHANCERY BLDG 8.33 M CARPORT 2.74 M UTILITY BLDG 4.82 M GROUND MOUNT 3.0 M		
MOUNTING SYSTEM:	CHANCERY: S-5-U MINI CLAMP & AND RAIL ON STANDING SEAM METAL ROOF OTHER STRUCTURES: EXISTING RAILS; SNAP-N-RACK ON GROUND MOUNT		
TILT ANGLE:	CARPORT: 7.5 DEG CHANCERY BLDG: 26 DEG UTILITY BLDG: 25 DEG GROUND MOUNT: 5 DEG		
ARRAY AZIMUTH	CHANCERY BLDG: 180° CARPORT: 50° UTILITY BLDG: 50° GROUND MOUNT: 50°		
MONITORING SYSTEM:	AGETO ARC COMPUTER		
INVERTER(S):	4 SMA TRIPOWER CORE1-50US 4 OZTEK 40 KW		

NOTES:

United States Department of State
OVERSEAS BUILDINGS OPERATIONS
Washington, D.C.

ENERGY CONSERVATION MEASURES AT U.S. EMBASSY KOLONIA FEDERATED STATES OF MICRONESIA

WARNING: This document is the property of the U.S. Government. Further reproduction and/or distribution is prohibited without the express written permission of: Office of Overseas Buildings Operations, U.S. Department of State, Washington, DC, 20520. Information on this document is not to be altered except with the written approval of the individual whose seal appears hereon.

Rev #	Description	Date

RME Electric Corporation
19160 Smith Road
Aurora, CO 80011, USA

hollingsworth pack
Hollingsworth-Pack Corporation
201 Penniman Rd.
Williamsburg, VA 23185, USA

Global Solace
Global Solace Inc.
20530 Beallsville Rd.
Beallsville, MD 20839, USA
tel 000.000.0000

Release For Construction: A/OBO/PE/PM | A/OBO/PE/EDE

Drawing Title: NOTES
PHOTOVOLTAIC SYSTEM

OBO Project Number: 19GE5019C0028
Drawing Scale: NTS
Phase: ☐ 35%(CD1) ☐ 60%(CD1) ☐ 90%(CD2) ☐ 100%(CD3) ☒ 100%(CD2) ☐ IFC
CAD File Name: FSM-GEN-PV-C02.dwg
CAD Plot Scale: 1:1
Date: 2021/04/02
Drawn By: JLE
Checked By: LBR
A/E Project Number: 20-1089
Sheet Number: GEN PV0-001

2

CODE COMPLIANCE

1. ENSURE CONFIGURATION WITH GENERATOR CONTROLS THAT WILL NOT ALLOW PARALLEL OPERATION.
2. GRID DOWN: GENERATOR SOLE SOURCE OF POWER AND IS ELECTRICALLY SEPARATE FROM SOLAR AND BATTERY.
3. ALL WORK TO COMPLY WITH NEC 2020 AND SPECIFICALLY TO THE FOLLOWING ARTICLES:
   690: PV SYSTEM, 705: INTERCONNECTED POWER PRODUCTION SOURCES, 480: STORAGE BATTERY, 706: ENERGY STORAGE SYSTEM (SPECIFIC EXEMPTIONS TO BE GRANTED BY AHJ, WHEN LISTED EQUIPMENT OR METHODS ARE NOT AVAILABLE TO MEET PROJECT REQUIREMENTS).
4. 110.3(B): ALL EQUIPMENT INSTALLED ACCORDING TO INSTRUCTIONS.
5. 110.26, 480.10(C), 706.20(C): ADEQUATE WORKING SPACE PROVIDED AT ALL SERVICEABLE EQUIPMENT.
6. 200.6: AC & DC GROUNDED CONDUCTORS ARE IDENTIFIED WHITE OR GREY, 210.5(C)(2) & 690.31(A)(1) DC POSITIVE CONDUCTOR IDENTIFIED RED, "+", OR "POS".
7. 690.31(A) EXPOSED ARRAY CABLES ARE GUARDED WHERE READILY ACCESSIBLE.
8. 690.31(C)(1) EXPOSED SINGLE CONDUCTOR PV WIRE, RATED 1000V ALLOWED AT PV ARRAY, MUST BE SECURED EVERY 24'.
9. INSTALLER TO INSURE VOLTAGE RATING AND LISTED COMPATIBILITY OF MALE AND FEMALE PV LOCKING CONNECTORS TO INSURE LOW RESISTANCE CONNECTION, AND AVOID DANGEROUS OVER HEATING OF CONNECTIONS.
10. ALL WIRE AND CABLE TO BE COPPER CONDUCTOR ONLY, NO ALUMINUM PERMITTED PER OBO REQUIREMENTS.
11. UTILITY INTERCONNECT AGREEMENT IF REQUIRED BY LOCAL UTILITY.
12. ALL ABOVE GROUND CONDUIT TO BE GALVANIZED OR STAINLESS RIGID METAL CONDUIT RMC EXCEPT WHERE FLEX IS SPECIFICALLY RECOMMENDED. WHERE FLEX IS SPECIFIED, IT SHALL BE FLEXIBLE METAL CONDUIT FMC FOR INDOORS OR LIQUID TITE FLEXIBLE METAL CONDUIT LFMC FOR OUTDOORS. ALL BELOW GRADE CONDUIT TO BE RMC, OR SCH 40 PVC ENCASED IN CONCRETE.
13. 110.14(C) TERMINALS RATED AT 75C, CONDUCTORS RATED AT 90C, SHALL USE 75C COLUMN OF TABLE 310.16 FOR AMPACITY CALCULATIONS.
14. 215.3,690.9(B)(2): OVERCURRENT DEVICE LISTED FOR 100% CONTINUOUS OPERATION ALLOWED TO BE USED AT FULL RATING.
15. 310.15(C)(1)(B) CONDUCTOR FILL ADJUSTMENT EXEMPT ON RACEWAYS LESS THAN 24" LONG, OTHERWISE USE TABLE 310.15(C)(1) FOR MORE THAN 3 CURRENT CARRYING CONDUCTORS.
16. 690.9(A)(1) OCPD NOT REQUIRED FOR LESS THAN 3 PV SOURCE CIRCUITS,
17. 690.43, 250.122, 250.134(B): PROPERLY SIZED EQUIPMENT GROUNDING CONDUCTOR IS ROUTED WITH THE CIRCUIT CONDUCTORS, OR SEPARATELY AS ALLOWED FOR DC CONDUCTORS. 690.45 EGC SIZED PER TABLE 250.122
18. 690.47, 250.50: ALL EGC CONDUCTORS ARE PROPERLY CONNECTED TO BUILDING OR STRUCTURE GROUNDING ELECTRODE SYSTEM.
19. 690.47(B): PV ARRAY STEEL MOUNTING POLE ENCASED IN CONCRETE SHALL BE CONSIDERED A GROUNDING ELECTRODE PER REQUIREMENTS OF 250.52(A)(7).
20. 480.10(B): LIVE PARTS OF BATTERY SYSTEMS ARE GUARDED TO COMPLY WITH 110.27.
21. 480.7(A): DISCONNECTING MEANS SHALL BE READILY ACCESSIBLE AND LOCATED WITHIN SIGHT OF THE BATTERY SYSTEM FOR BATTERIES OVER 60 VDC.
22. 240.21(B)(1): TAP ALLOWED ON FEEDER WITH OCP AT SUBPANEL WHEN TAP CONDUCTORS <10 FT.
23. 705.13 ALLOWS MONITORING AND CURRENT LIMITING VIA POWER CONTROL SYSTEM.
24. LINE SIDE TAP & ENCLOSURE (#16): TAP THE LOAD CENTER ON THE XFMR BUSHINGS. SUBMIT LOAD CENTER DATA TO OWNER, ENGINEER AND OTHER REQUIRED STAKEHOLDERS FOR REVIEW AND APPROVAL PRIOR TO PROCUREMENT AND INSTALLATION. LOAD CENTER TO BE INSTALLED WITHIN 10FT FROM INTERCONNECTION (NEC ART 240 10FT TAP RULE)
25. TRANSFORMER (#5) & BESS AC LOAD PANEL (#11): PRIOR TO PROCUREMENT AND INSTALLATION CONTRACTOR SHALL SECURE FORMAL APPROVAL BY UTILITY, AHJ, OWNER, AND ENGINEER FOR ALL THE PROPOSED MEANS AND METHODS OF SERVICE FEEDER INTERCEPTION, CTS, ENCLOSURE TYPE AND LOCATION, OUTAGE, BACK UP POWER, ETC

SEQUENCE OF OPERATIONS

PURPOSE: MINIMIZE USE OF UTILITY GRID

- BATTERIES PROVIDE POWER TO LOADS AT NIGHT AND DURING TIMES WHEN SOLAR PV IS INSUFFICIENT.
- AS SOLAR BEGINS TO GENERATE IN THE MORNING, IT FIRST POWERS THE LOADS AS MUCH AS POSSIBLE, ALLOWING THE BATTERIES TO REDUCE OUTPUT.
- WHEN SOLAR IS MORE THAN LOADS, THE BATTERIES GET RE-CHARGED TO BE READY FOR EVENING AND NIGHT.
- IF BATTERIES RUN DOWN AND CAN NOT POWER THE LOADS, THE GRID TAKES OVER, FOR LOADS ONLY, NO BATTERY RECHARGING.
- IF GRID GOES DOWN, GENERATOR STARTS UP AND POWERS THE LOADS.
- AGETO ARC COMPUTER SLOWS PRODUCTION IF BATTERIES ARE CHARGED, LOADS SATISFIED AND EXCESS SOLAR PV IS GENERATED.
- TO PREVENT EXCESS POWER BACK FEEDING GRID THE AGETO CONTROLLER CONTINUOUSLY MONITORS THE ENERGY TO AND FROM THE GRID VIA THE ACCUVIM ENERGY MONITOR. AS NEEDED, THE CONTROLLER REDUCES PV AND BATTERY INVERTER OUTPUT SO THAT TOTAL OUTPUT NEVER EXCEEDS ONSITE LOADS.
- SINCE PV SYSTEM EXCEEDS EXISTING SERVICE SIZE, 705.13 ALLOWS PCS MONITORING AND CURRENT LIMITING AS FIRST TIER OF OCP. SECOND TIER OCP IN CASE OF ARC COMPUTER FAILURE OR LOSS OF COM, ALL PV INVERTERS ARE PROGRAMMED TO DEFAULT TO 5% OUTPUT AND BATTERY INVERTERS TO ENTER STANDBY MODE. FINAL OCP IS VIA TRADITIONAL BREAKERS SIZED TO PROTECT ALL CONDUCTORS AND EQUIPMENT.

United States Department of State
OVERSEAS BUILDINGS OPERATIONS
Washington, D.C.

ENERGY CONSERVATION MEASURES AT U.S. EMBASSY KOLONIA FEDERATED STATES OF MICRONESIA

WARNING This document is the property of the U.S. Government. Further reproduction and/or distribution is prohibited without the express written permission of Office of Overseas Buildings Operations, U.S. Department of State, Washington, DC, 20520. Information on this document is not to be altered except with the written approval of the individual whose seal appears hereon.

Rev #	Description	Date

RME Electric Corporation
19160 Smith Road
Aurora, CO 80011, USA

Hollingsworth-Pack Corporation
201 Fenimman Rd,
Williamsburg, VA 23185, USA

Global Solace Inc.
20530 Beallsville Rd,
Beallsville,MD 20839, USA
tel 000.000.0000

Release For Construction:
A/OBO/PE/PM | A/OBO/PE/ADE

Drawing Title: **NOTES**

PHOTOVOLTAIC SYSTEM

OBO Project Number 19GE5010C0026	Drawing Scale NTS	Phase ☐ 35%(CD1) ☐ 100%(CD3) ☐ 60%(CD1) ☐ 100%(CD2) ☐ 50%(CD2) ☐ IFC	
CAD File Name FSM-GEN-PV-C02.dwg	CAD Plot Scale 1:1		
Date 2021/04/02	Sheet Number GEN PV0-002		
Drawn By J.E			
Checked By LBR			
A/E Project Number 20-1069			

UNCLASSIFIED

3

UNCLASSIFIED

LABELS AND MARKINGS LEGEND:

A. PROVIDES THE LOCATION OF THE SERVICE DISCONNECTING MEANS AND THE PHOTOVOLTAIC DISCONNECTING MEANS. THIS PLAQUE SHALL BE APPLIED TO THE MAIN SERVICE DISCONNECTING MEANS.
B. (NOT USED)
C. DC DISCONNECT WARNING LABEL LOCATED AT INVERTER (INTEGRATED DC DISCONNECT) (4)
D. PHOTOVOLTAIC INVERTER OPERATING SPECIFICATIONS LABEL APPLIED TO 50kW INVERTERS. (4)
E. (NOT USED)
F. PHOTOVOLTAIC AC DISCONNECT WARNING APPLIED TO DISCONNECTS ON CHANCERY WALL (2)
G. MAIN SOLAR AC DISCONNECT SWITCH
H. LABEL REQUIRED ON OR NEAR THE INTERCONNECTION POINT (MDSG).
I. SOLAR PV DATA ACQUISITION SYSTEM BOX GENERIC LABEL, ONE PER BOX.
J. TO BE PLACED ON DISCONNECTS & SOLAR AC DISCONNECT.
K. K. TO BE PLACED ON PV J BOXES
L. PHOTOVOLTAIC POWER SOURCE, PER 690.31.2, APPLY ON ALL PV DC CONDUITS AND EQUIPMENT
M. LABEL TO BE PLACED ON AC COMBINER
N. LABEL TO BE PLACED ON BATTERY CONTAINER (2)
O. (NOT USED)
P. (NOT USED)
Q. TO BE USED ON EXPOSED RACEWAYS, COVERS, ENCLOSURES, JUNCTION BOXES, CONDUIT BODIES ETC. PLACE 10FT APART. REFER 690.31 (2)

(XX) NOTES:

1. LABELS AND MARKINGS SHALL BE APPLIED TO THE APPROPRIATE COMPONENTS IN ACCORDANCE WITH THE NEC.
2. SOLAR MODULES AND INVERTER(S) ARE SUPPLIED FROM THE MANUFACTURER WITH MARKINGS PRE-APPLIED TO MEET THE REQUIREMENTS OF THE NEC.
3. TEXT LABELS WILL BE PERMANENT, SELF-ADHESIVE, ENGRAVED RED STOCK WITH WHITE CORE PLASTIC WITH A MINIMUM THICKNESS 1.5MM.
4. ALL DIMENSIONS ARE IN MILLIMETERS (MM)
5. BASED ON FINAL EQUIPENT SELECTION AND OVERALL SYSTEM CONFIGURATION, FORMAL SHORT CIRCUIT STUDY, COORDINATION STUDY AND ARC FLASH ANALYSIS WILL BE DEVELOPED FOR THE ENTIRE SYSTEM. ARC FLASH LABELS ARE REQUIRED TO BE GENERATED AND APPLIED ON ALL EQUIPMENT.

(A) 215 × 165
CAUTION
POWER TO THIS SERVICE IS ALSO SUPPLIED FROM THE FOLLOWING SOURCES WITH DISCONNECTS LOCATED AS SHOWN
BATTERY SYSTEM
ELECTRICAL SERVICE, TEMPORARY AND MAIN AC DISCONNECT (FIELD LOCATION)
PHOTOVOLTAIC ARRAYS
PV INVERTERS AND AC DISCONNECT
PHOTOVOLTAIC ARRAY

(C) 150 × 70
MULTIPLE DISCONNECT SAFETY SWITCH
WARNING: TERMINALS BOTH LINE AND LOAD SIDE MAY BE ENERGIZED WHEN PHOTOVOLTAIC MODULES ARE EXPOSED TO SUNLIGHT
DISCONNECT RATING: 250A
DC VOLTAGE: 600VMAX

(D) 150 × 138
50kW SOLAR PV INVERTER
WARNING: PV DC CONDUCTORS ARE UNGROUNDED AND REMAIN ENERGIZED EVEN IF DISCONNECTED FROM INVERTER.
NOTE: POINT OF INTERCONNECTION IN ELECTRICAL ROOM
INVERTER AC RATINGS:
AC OUTPUT CURRENT 64A
NOMINAL AC VOLTAGE 480
OUTPUT LIMITED BY CONTROL SYSTEM

(F) 150 × 125
SOLAR PV SYSTEM AC DISCONNECT SWITCH
WARNING: ELECTRIC SHOCK HAZARD. DO NOT TOUCH TERMINALS. TERMINALS ON BOTH THE LINE AND LOAD SIDE MAY BE ENERGIZED IN THE OPEN POSITION.
AC OUTPUT CURRENT 64A
NOMINAL AC VOLTAGE 480 - AC WYE

(M) 150 × 100
AC COMBINER
480 VAC Wye, 3 PHASE
400A BUS
232A NOMINAL PV IN
104A MAX OUTPUT LIMITED BY CONTROL SYSTEM

(G) 150 × 60
MAIN SOLAR AC DISCONNECT SWITCH
AC OUTPUT CURRENT 240A
NOMINAL AC VOLTAGE 208 WYE

(K) 150 × 63
WARNING!
NOT LOAD BREAK RATED!
DO NOT OPEN DIRECT UNDER LOAD

(H) 100 × 75
SOLAR PV SYSTEM INTERACTIVE POINT OF INTERCONNECTION
AC OUTPUT CURRENT 240A
NOMINAL AC VOLTAGE 208VLL3 VAC
OUTPUT LIMITED BY CONTROL SYSTEM

(I) 100 × 38
SOLAR PV DATA ACQUISITION SYSTEM

(J) 100 × 100
DANGER!
ARC FLASH AND SHOCK HAZARD!
FOLLOW ALL REQUIREMENTS IN NFPA 70E FOR SAFE WORK PRACTICES AND FOR PERSONAL PROTECTIVE EQUIPMENT

(L) 100 × 75
WARNING
PHOTOVOLTAIC POWER SOURCE

(N) 150 × 100
160 KW BATTERY SYSTEM
NOTE: POINT OF CONNECTION MAIN SERVICE DISCONNECT.
AC OUTPUT CURRENT 114A
AC OUTPUT VOLTAGE 480VAC Wye
MAX DC INPUT CURRENT 20A
DC INPUT VOLTAGE 600V NOM
OUTPUT LIMITED BY CONTROL SYSTEM

(?) 150 × 125
TRANSFORMER
112.5KVA CONTINUOUS
480V WYE TO 208V WYE
104A @ 480 VAC
240A @ 208 VAC
OUTPUT LIMITED BY CONTROL SYSTEM

UNCLASSIFIED

United States Department of State
OVERSEAS BUILDINGS OPERATIONS
Washington, D.C.

ENERGY CONSERVATION MEASURES AT U.S. EMBASSY KOLONIA FEDERATED STATES OF MICRONESIA

WARNING: This document is the property of the U.S. Government. Further reproduction and/or distribution is prohibited without the express written permission of Office of Overseas Buildings Operations, U.S. Department of State, Washington, DC, 20520. Information on this document is not to be altered except with the written approval of the individual whose seal appears hereon.

Rev #	Description	Date

RME Electric Corporation
19160 Smith Road
Aurora, CO 80011, USA

Hollingsworth-Pack Corporation
201 Penniman Rd.
Williamsburg, VA 23185, USA

Global Solace Inc.
20530 Beallsville Rd.
Beallsville, MD 20839, USA
tel 000.000.0000

Release For Construction:
A/OBO/PE/PM | A/OBO/PE/BDE

Drawing Title
SYSTEM LABELS
PHOTOVOLTAIC SYSTEM

CADD Project Number: 19GE5018C0528	Drawing Scale: NTS	Phase: ☐ 35%(CD1) ☐ 100%(CD3) ☐ 60%(CD1) ☒ 100%(CD3) ☐ 90%(CD2) ☐ IFC
CAD File Name: FSM-GEN-PV-C02.dwg	CAD File Scale: 1:1	
Date: 2021/04/02	Sheet Number: GEN PV0-003	
Drawn by: A.E		
Checked By: LBR		
AE Project Number: 20-1069		

UNCLASSIFIED

4

UNCLASSIFIED

NOTES:

1. CONTRACTOR SHALL COORDINATE AND FORMALLY DOCUMENT THE VERIFICATION AND MARKING OF EXISTING UNDERGROUND UTILITIES AT LEAST 72 HOURS PRIOR TO WORK COMMENCEMENT.
2. CONTRACTOR SHALL BACKFILL USING NATIVE EXCAVATED MATERIAL (FREE FROM DEBRIS, ORGANIC MATERIAL AND STONES), THERMAL BACKFILL OR SAND. SOLIDS SHALL BE NO GREATER THAN 1/4" DIAMETER
3. ALL FILL SHOULD BE PLACED IN HORIZONTAL 8" LOOSE LIFTS AND COMPACTED TO 95% MAXIMUM DRY DENSITY.
4. CONDUIT SHALL BE SEALED AT ALL TERMINATIONS WITH A COMPOUND LISTED FOR SUCH CONDITIONS AND USED TO PREVENT MOISTURE FROM ENTERING OR EXITING CONDUIT, AND TO PROTECT LIVE COMPONENTS.
5. CONTRACTOR SHALL INSTALL RACEWAYS WITH FLEXIBLE CONNECTIONS TO ACCOMMODATE CONDITIONS SUCH AS EARTH SETTLEMENT AND FROST HEAVES. CONNECTIONS/FITTINGS MUST BE LISTED FOR SUCH CONDITIONS AND USE.
6. TRENCH DEPTHS SHOWN ARE MINIMUM REQUIREMENTS. FIELD TRENCH DEPTHS AND DIMENSIONS SHALL BE COMPLIANT WITH NEC TABLE 300.5, 300.50 AND OTHER RELEVANT SECTIONS.
7. CONTRACTOR SHALL RESTORE ALL TRENCHED SURFACES TO AS-FOUND CONDITIONS INCLUDING SEEDING, PAVEMENT, OR ASPHALT.

NOT USED | 2 | M12J1

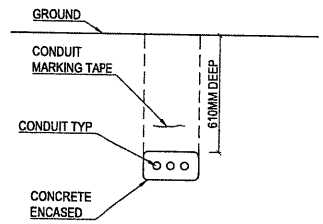

NOT USED | 1 | M18J13

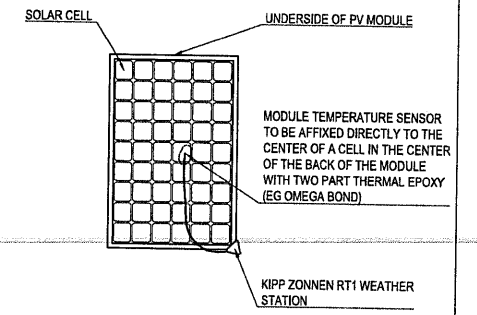

WEATHER STATION AND MOUNTING TEMPERATURE SENSOR DETAIL | NTS | 5 | H13E9

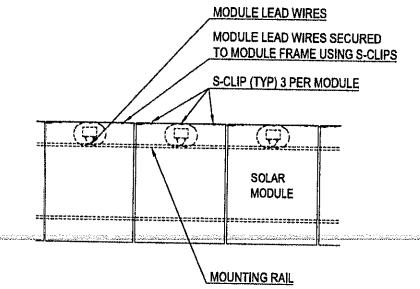

WIRE MANAGEMENT DETAIL | NTS | 4 | H18E14

NOT USED | NTS | 3 | M8E1

NOT USED | NTS | 8 | D6A1

NOT USED | NTS | 7 | D12A7

NOT USED | NTS | 6 | D18A13

UNCLASSIFIED

United States Department of State
OVERSEAS BUILDINGS OPERATIONS
Washington, D.C.

ENERGY CONSERVATION MEASURES AT U.S. EMBASSY KOLONIA FEDERATED STATES OF MICRONESIA

WARNING: This document is the property of the U.S. Government. Further reproduction and/or distribution is prohibited without the express written permission of: Office of Overseas Buildings Operations, U.S. Department of State, Washington, DC, 20520. Information on this document is not to be altered except with the written approval of the individual whose seal appears hereon.

Rev #	Description	Date

RME Electric Corporation
19160 Smith Road
Aurora, CO 80011, USA

Hollingsworth-Peck Corporation
201 Penniman Rd.
Williamsburg, VA 23185, USA

Global Solace Inc.
20530 Beallsville Rd.
Beallsville, MD 20839, USA
tel 000.000.0000

Release For Construction:
A/OBO/PE/PM | A/OBO/PE/SDE

Drawing Title
DETAILS
PHOTOVOLTAIC SYSTEM

OBO Project Number: 19GE3019C0028	Drawing Scale: NTS	Phase: ☐ 35%(CD1) ☐ 100%(CD3) ☐ 60%(CD1) ☒ 100%(CD2) ☐ 90%(CD2) ☐ IFC
CAD File Name: FSM-GEN-PV-CO2.dwg	CAD Plot Scale: 1:1	
	Date: 2021/01/28	Sheet Number: GEN PV5-001
	Drawn By: J.E.	
	Checked By: LBR	
	A/E Project Number: 20-1089	

UNCLASSIFIED

5

UNCLASSIFIED

EQUIPMENT SCHEDULE

ITEM	NAME	QTY	MAKE/ MODEL	VOLTAGE	AMPERAGE	KAIC RATING	DESCRIPTION
1	PV MODULE	616	REC Alpha Series 365 watt Solar Panel, 368 W flash	Voc = 44.0 Vmpp = 37.1	Isc = 10.52 Impp = 9.85	N/A	UL 1703 Certified
2	J Boxes, One at Main Building, Two at BESS, Four at PV arrays	6	Two - 18" x 18", Four 12" x 12" NEMA 3R or 4X, Stainless preferred			N/A	18 x Main Tap wiring, 18 x AC output from BESS, 12 x Inverter input to BESS, 12 x arrays to Inverters
3 (3A-D)	PV INVERTERS (2 x Chancery Attic, 1 x Car Port, & 1 x Ground Mount)	4	SMA TRIPOWER CORE 1 50-US, Current limited by inverter programming & PCS to not exceed Battery max input of 200A, and/ or load output of 103A	VmaxDC = 1000 VAC out = 480 WYE, Neutral not Required	Imax = 63.8 PER PHASE	N/A	6 MPPT DC INPUTS, 2 STRINGS per INPUT, 75 KW MAX DC in, 50 kW AC Max out UL 1741 Certified
4	AC COMBINER	1	GE AB64B Panel 400A Buss, 30 space, 600 VAC 3P. NEMA 1 Mounted inside of BESS, Total Output limited by PCS to 86 kVA, 103A @ 460VAC	Vac = 480, 3 PH. WYE, Limited by PCS to 160A, total output to.	Ibuss = 400A. Max PV Input = 232A Battery Inverter IN/ OUT limited to 104A #5 Transformer	18kA @ 480 VAC, fault current limited by transformer impedance	4 - 80A 3P, PV Inverter Breakers, 2 - 125A Battery Inverter Breakers, 2 - 30A 3P HVAC Breakers, 3 - 15A 2P Control Breakers, 1 - 15A 1P Lights, 150A SFHA Main Output Breaker to Transformer
5	TRANSFORMER	1	Larson Electronics MT-ISX-3P-480Y-112.5KVA-208Y. 120-N3R	480 WYE Secondary 208/ 120 Primary	135A rated @ 480V 313A rated @ 208V 104A max @ 480V 240A max @ 208V, current limited by PCS	7.2 KA @ 480 VAC on Secondary	112.5 KVA, THREE PHASE, 60 HZ. Mounted in Electrical Room
6	SOLAR A/C SERVICE DISCONNECT INDOORS	1	OCP, NEMA 1, Indoor rated, Service Rated.	208/ 120, 3P	400A Buss, 300A OCPD	65KA AT 240Vac	
7	TRANSFER SWITCH	1	Exisitng Square D	208/ 120, 3P	400A	Unknown	Existing Legacy Equipment
8	MAIN SERVICE DISCONNECT	1	Existing Square D Breaker	208/ 120, 3P	400A Buss, 300A CB	10 kAIC according to Riser diagram	Existing Legacy Equipment
9	UTILITY METER	1	EXISTING 100 KVA Service	208/ 120, 3P	Full load 278A	Isc = 9.3 KA	Existing Legacy Equipment
10	BATTERY STORAGE SYSTEM (BESS) To be Designed, Built, and Documented by Kronus. In 2 Containers side by side.	1	Kronus Engineering built in two 20ft containers, includes 4 x 40 kW Oztek Inverters & 11 x Kore Power 1 Battery Racks output/ input limited by internal programming & PCS	Vdc Nom = 650 Vdc Max = 800 Vac =480	Adc =300, Aac = 200 rated, but output current limited to 103A @ 480 Vac to Transformer		CONTINUOUS POWER 160 kWac, 3 PHASE 60 HZ. UL Certified: 1741-SA, 1973, 9540.
12	Inverter AC Disconnect(s)	2	?? Safety Switch, 600 VAC, Non Fusible 100A, NEMA 3R	480 WYE, 3P, 60 Hz	100A	200 kAIC	Heavy Duty, 600 VAC Rated, 100A, 3 Pole
13	AC LOAD PANEL - EXISTING	1	Square D, 300A Main CB, 400A buss	120/ 208 VAC, 3 phase	300A		Existing Legacy Equipment
14	POWER ANALYZER	2	ACCU ENERGY ACCUVIM II	10VAC - 1,000 VAC	5mA - 50 KA		-9999W to +9999MW, 60 Hz, RS485 Port
15	CONTROLLER / MONITOR	1	AGETO AGETO ARC COMPUTER	120VAC			SEE COMPUTER DATA SHEETS Programmable for Zero Utility Backfeed. (Included with #10 BESS)
16	LINE SIDE TAP	4	KUP-L-TAP● IPC-500-500	Vmax = 600 rated, 208VAC actual			Insulation Piercing (Dual Rated) UL 486A/B 90 C LISTED
17	WEATHER STATION	1	KIPP ZONNEN MODEL ROOF TOP SENSOR RT1	5-30VDC	<0.01 A		PV PANEL TEMP - 20 to 100 C 0 to 2000 W/M2 IRRADIANCE
19	Internet Access		Onsite Server, Unknown	120VAC			Wifi may be available on site, otherwise a wired internet connection will be required
21	BATTERY INVERTER/ CHARGER	4	Oztek PCS RS 40. Inverter Current limited by internal programming & PCS to not exceed max input of 200A, or load output of 103A	300 - 800Vdc, 480Vac WYE 60Hz	Aac = 50A Rated x 4, Max PV Input 232A, 60A OCP x 4. Battery Input limited to 80% of Rating or 160A ac into Battery Inverter		UL Certified: 1741-SA, 1973, 9540 Included with (10) BESS
22	BATTERY Cabinet & BMS Battery Management System	11	Kore Power M1	450 - 756Vdc, 650Vdc Nom	160A DC Each module has separate 160A OCP Fuse and Disconnect	10kA for 1 microsecond, but 1kA for 1 sec to trip OCPD	Included with (10) BESS. 11 racks total, Certified to UL 1973. See Documentation in BESS Submittal
26	HVAC UNIT	2	Thermoking Magnum +	460VAC	25A (x2)	30A 3P OCPD	Built in to each Container

EQUIPMENT SCHEDULE | NTS | 2 / M10A1

UNCLASSIFIED

DC WIRE/ CKT SCHEDULE

CKT#	FROM	TO	CONDUIT (TYPE, SIZE)	CONDUCTORS	GROUNDING
A	Chancery Roof	Core 1 Inverters	1/2" (16 mm) to 1" (27 mm) LFMC as needed to conform to curves of roof penetration	Eight #10 AWG (5.261 MM2) CU PV WIRE - 1000 V rated	#10 (5.26 mm2) solid CU EGC
B	Utility Building / Ground mounts	Carport Inverter / Ground mounts	1-1/4" (35mm) RMC Galvanized, SCH 40 PVC encased in concrete below grade	Six to Twelve #10 Awg (5.26 mm2) CU PV Wires, 1000 V rated	#6 (13.3 mm2) solid CU EGC to GE

AC WIRE/ CKT SCHEDULE

CKT#	FROM	TO	CONDUIT (TYPE, SIZE)	CONDUCTORS	GROUNDING
C	Core 1 Inverters	AC Combiner	1 1/ 4" (35mm) RMC, or LFMC (Whip at inverter) SCH 40 PVC encased in concrete below grade	Three #4 AWG (21.15mm2) CU THWN-2 (L1, L2, L3)	One #8 AWG (8.4 mm2) CU EGC
E	BESS AC Combiner	Transformer Secondary	2" (53mm) RMC Conduit transition to LFMC Conduit whip at transformer for vibration, SCH 40 PVC encased in concrete below grade	Four #3/0 AWG (85mm2) Cu THWN-2 conductors	One #4 AWG (21.2 mm2) CU EGC
F	Transformer Primary	Solar AC Disconnect	3" (78mm) RMC Conduit transition to LFMC whip at transformer for vibration	Four 350 MCM AWG (152mm2) Cu THWN - 2 conductors	#2 AWG (33.6 mm2) CU EGC

DATA WIRE/ CKT SCHEDULE

CKT#	FROM	TO	CONDUIT (TYPE, SIZE)	CONDUCTORS / CABLE	GROUNDING
G	Various	Various	3/4" (21mm) or 1" (27mm) RMC Galvanized, SCH 40 PVC encased in concrete below grade	One or Two CAT5e shielded cables with RJ 45 Connectors	via Shielding

WIRE & CONDUIT SCHEDULE | NTS | 1 / M18A11

United States Department of State
OVERSEAS BUILDINGS OPERATIONS
Washington, D.C.

ENERGY CONSERVATION MEASURES AT U.S. EMBASSY KOLONIA FEDERATED STATES OF MICRONESIA

WARNING: This document is the property of the U.S. Government. Further reproduction and/or distribution is prohibited without the express written permission of Office of Overseas Buildings Operations, U.S. Department of State, Washington, DC, 20520. Information on this document is not to be altered except with the written approval of the individual whose seal appears hereon.

Rev #	Description	Date

RME Electric Corporation
19160 Smith Road
Aurora, CO 80011, USA

Hollingsworth-Pack Corporation
201 Penniman Rd.
Williamsburg, VA 23185, USA

Global Solace
Global Solace Inc.
20530 Beallsville Rd.
Beallsville,MD 20839, USA
tel 000.000.0000

Release For Construction:
A/OBO/PE/PM | A/OBO/PE/SDE

Drawing Title
REFERENCES
PHOTOVOLTAIC SYSTEM

OBO Project Number 19GE5019C0026
CAD File Name FSM-GEN-PV-C02.dwg
Drawing Scale NTS
CAD Plot Scale 1:1
Phase ☐ 35%(CD1) ☐ 100%(CD3) ☐ 60%(CD1) ☒ 100%(CD2) ☐ 90%(CD2) ☐ IFC

Date 2021/04/02
Issue By J.E
Checked By LBR
A/E Project Number 20-1089
Sheet Number GEN PV6-001

UNCLASSIFIED

6

UNCLASSIFIED

REFERENCES:

1. ROOF, GROUND, & CARPORT ARRAYS
   60 CELL MODULES IN SERIES STRINGS OF 14 TO 19
2. ARRAY J-BOXES
3. INVERTER: SMA TRIPOWER CORE1 50-US (6 MPPT INPUTS)
4. AC COMBINER
5. TRANSFORMER
6. SOLAR A/C DISCONNECT INDOORS
7. TRANSFER SWITCH EXISTING
8. MAIN DISCONNECT - EXISTING
9. UTILITY METER - EXISTING
10. BATTERY STORAGE SYSTEM (BESS)
11. (NOT USED)
12. INVERTER AC DISCONNECT
13. AC LOAD PANEL - EXISTING
14. POWER ANALIZER
15. CONTROLLER / MONITOR
16. LINE SIDE TAP
17. WEATHER STATION
18. (NOT USED)
19. INTERNET
20. (NOT USED)
21. BATERY INVERTER / CHARGER
22. BATTERY STORAGE RACK + BMS

X. STRING ID LEGEND: FIRST NUMBER INDICATES WHICH PV INVERTER, LETTER CORRESPONDS TO INPUT LABELS ON INVERTER, LAST NUMBER IDENTIFIES PARALLEL STRINGS ON THE SAME INPUT.

NOTES:

1. DASHED LINES REPRESENT DATA CABLES.
2. SEE GEN-PV6-001 FOR COMPLETE KEY REFERENCES LIST, INCLUDING WIRE AND CONDUIT SIZES.
3. #10 BATTERY STORAGE CONTAINER WILL INCLUDE #4, #15, #21, #22, WHICH ARE SHOWN HERE ONLY FOR REFERENCE.

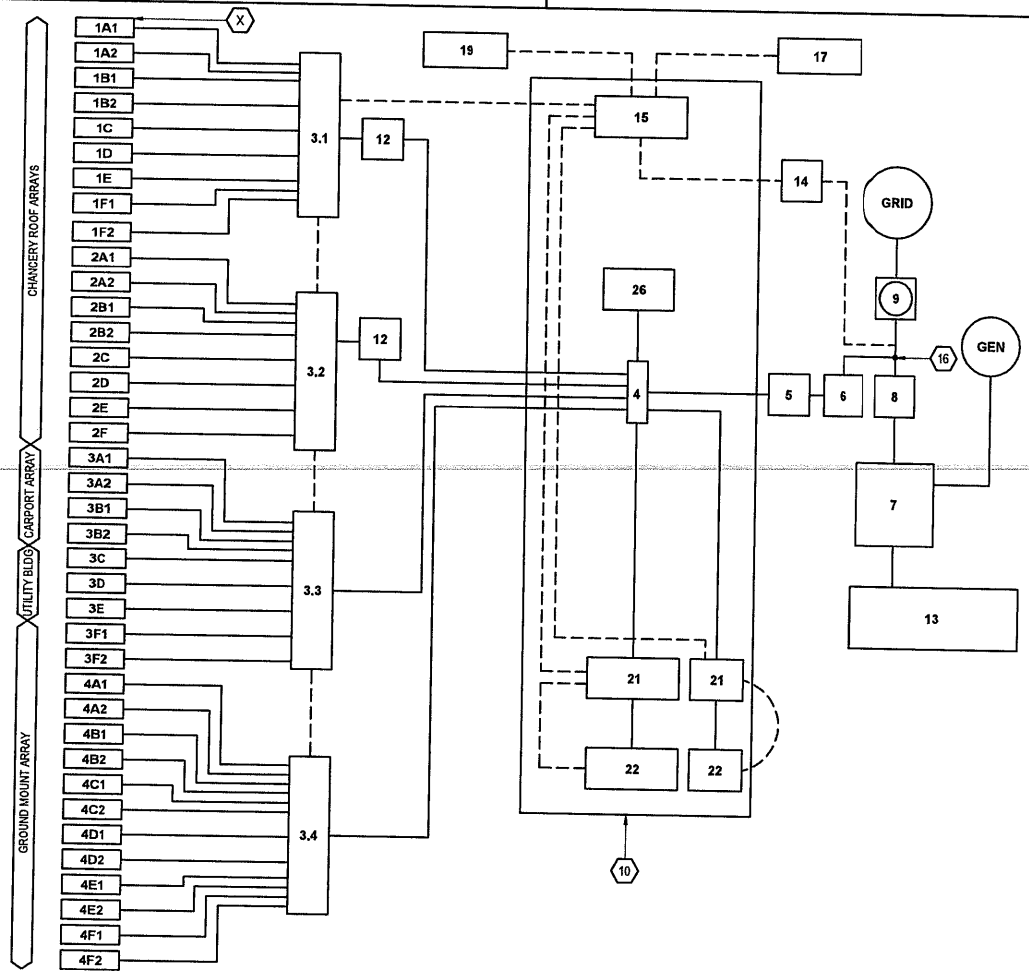

UNCLASSIFIED

United States Department of State
OVERSEAS BUILDINGS OPERATIONS
Washington, D.C.

ENERGY CONSERVATION MEASURES AT U.S. EMBASSY KOLONIA FEDERATED STATES OF MICRONESIA

WARNING: This document is the property of the U.S. Government. Further reproduction and/or distribution is prohibited without the express written permission of Office of Overseas Buildings Operations, U.S. Department of State, Washington, DC, 20520. Information on this document is not to be altered except with the written approval of the individual whose seal appears hereon.

Rev #	Description	Date

RME Electric Corporation
19150 Smith Road
Aurora, CO 80011, USA

hollingsworth pack
Hollingsworth-Pack Corporation
201 Panaman Rd,
Williamsburg, VA 23185, USA

Global Solace
Global Solace Inc.
20530 Beallsville Rd.
Beallsville, MD 20839, USA
tel 000.000.0000

Release For Construction
A/OBO/PE/PM | A/OBO/PE/EDE

Drawing Title
BLOCK DIAGRAMS
PHOTOVOLTAIC SYSTEM

OBO Project Number: 19GE5019C0028
CAD File Name: FSM-GEN-PV-C02.dwg
Drawing Scale: NTS
CAD Plot Scale: 1:1
Phase: ☐ 35%(CD1) ☐ 100%(CD3) ☐ 60%(CD1) ☐ 100%(CD2) ☐ 90%(CD2) ☐ IFC
Date: 2021/04/02
Drawn By: J.E
Checked By: LBR
A/E Project Number: 20-1089
Sheet Number: GEN PV6-002

UNCLASSIFIED

7

UNCLASSIFIED

REFERENCES:

1. ROOF, CARPORT, & GROUND MOUNT PV ARRAYS OF 60 CELL MODULES IN SERIES STRINGS OF 14 TO 19 MODULES
2. ARRAY J-BOXES
3. INVERTER: SMA TRIPOWER CORE1 50-US (6 MPPT INPUTS)
4. AC COMBINER
5. TRANSFORMER
6. SOLAR A/C DISCONNECT INDOORS
7. TRANSFER SWITCH EXISTING
8. MAIN DISCONNECT - EXISTING
9. UTILITY METER - EXISTING
10. BATTERY STORAGE SYSTEM (BESS)
11. (NOT USED)
12. INVERTER AC DISCONNECT
13. AC LOAD PANEL - EXISTING
14. POWER ANALIZER
15. CONTROLLER / MONITOR
16. LINE SIDE TAP
17. WEATHER STATION
18. (NOT USED)
19. INTERNET
20. (NOT USED)
21. BATERY INVERTER / CHARGER
22. BATTERY STORAGE RACK + BMS

X. STRING ID LEGEND: FIRST NUMBER INDICATES WHICH PV INVERTER, LETTER CORRESPONDS TO INPUT LABELS ON INVERTER, LAST NUMBER IDENTIFIES PARALLEL STRINGS ON THE SAME INPUT.

NOTES:

1. ENSURE CONFIGURATION WITH GENERATOR CONTROLS THAT WILL NOT ALLOW PARALLEL OPERATION.
2. ALL DC POSITIVE CONDUCTOR TO BE RED OR MARKED WITH RED TAPE, ALL UNDERGROUND DC NEGATIVE CONDUCTORS TO BE BLACK TO INDICATE POLARITY AT ALL CONNECTIONS AND JUNCTION BOXES.
3. ALL EQUIPMENT GROUNDING CONDUCTORS TO BE BARE COPPER, GREEN OR MARKED WITH GREEN TAPE.
4. SEE GEN-PV6-001 FOR COMPLETE KEY REFERENCES LIST, INCLUDING WIRE AND CONDUIT SIZES
5. NEUTRAL BONDED TO GROUND ONLY AT MAIN DISCONNECT AND SECONDARY SIDE OF BESS TRANSFORMER.
6. LINE SIDE TAP AT MAIN DISCONNECT ALLOWED AS PER NEC REQUIREMENTS, VIA PIERCING TAP CONNECTORS
7. ETH - ETHERNET COMMUNICATIONS CONNECTOR
8. ALL PV AND BATTERY INVERTERS LIMITED BY SUNSPEC MODBUS CONTROL SYSTEM PER NEC 2020, 705.13

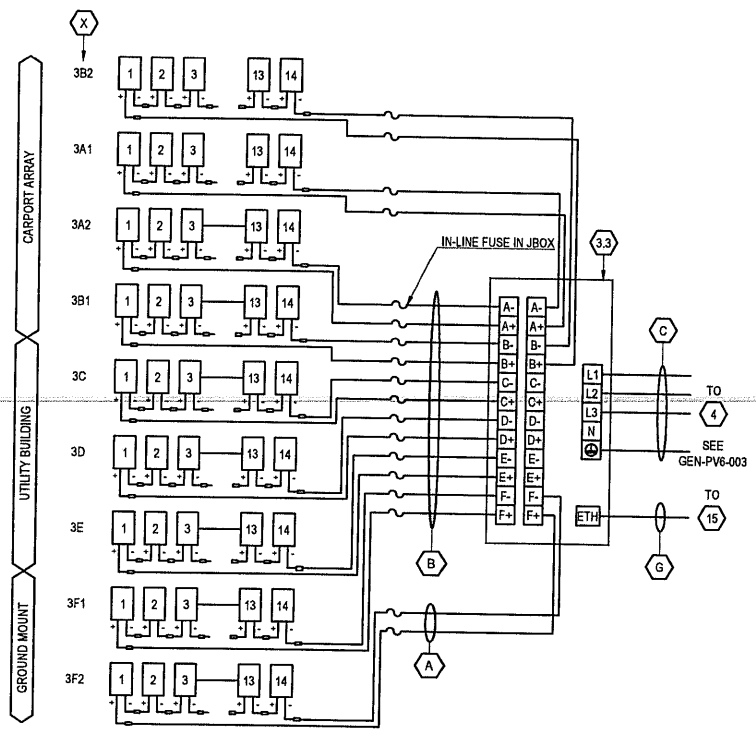

ELECTRICAL 3-LINE DIAGRAM | NTS | 2 / K9A1

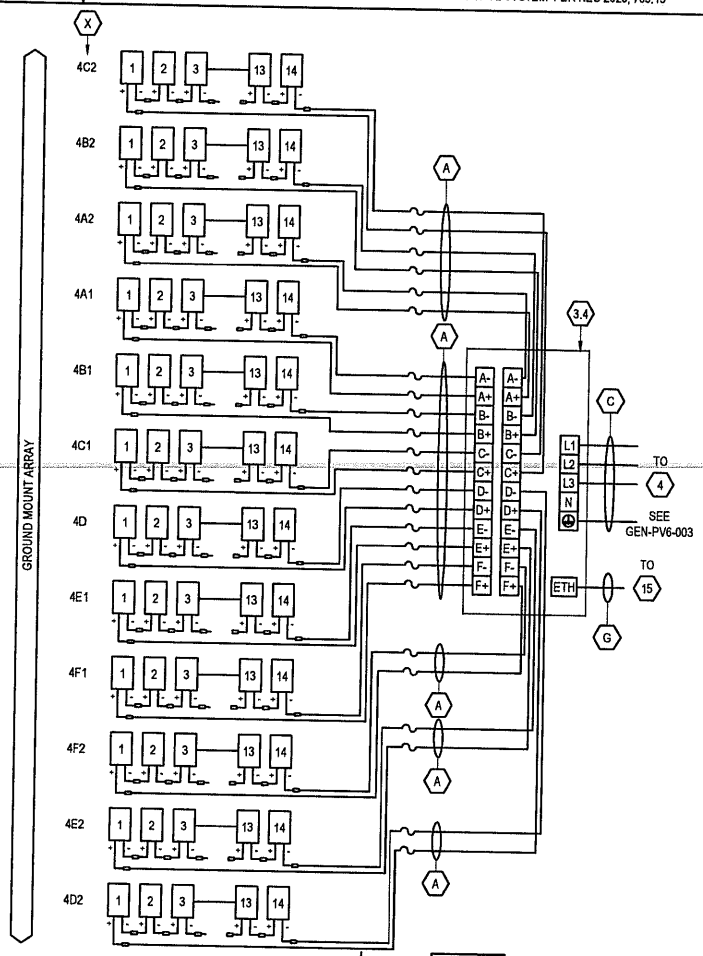

ELECTRICAL 3-LINE DIAGRAM | NTS | 1 / K18A10

UNCLASSIFIED

United States Department of State
OVERSEAS BUILDINGS OPERATIONS
Washington, D.C.

ENERGY CONSERVATION MEASURES AT U.S. EMBASSY KOLONIA FEDERATED STATES OF MICRONESIA

WARNING: This document is the property of the U.S. Government. Further reproduction and/or distribution is prohibited without the express written permission of: Office of Overseas Buildings Operations, U.S. Department of State, Washington, DC, 20520. Information on this document is not to be altered except with the written approval of the individual whose seal appears hereon.

Rev #	Description	Date

RMC Electric Corporation
19160 Smith Road
Aurora, CO 80011, USA

Hollingsworth-Pack Corporation
201 Panniman Rd.
Williamsburg, VA 23185, USA

Global Solace Inc.
20530 Beallsville Rd.
Beallsville,MD 20839, USA
tel 000.000.0000

Release For Construction:
A/OBO/PE/PM | A/OBO/PE/DE

Drawing Title:
ELECTRICAL 3-LINE DIAGRAMS
PHOTOVOLTAIC SYSTEM

OBO Project Number: 19GE5019C0025	Drawing Scale: NTS	Phase: ☐ 35%(CD1) ☐ 100%(CD3) ☐ 60%(CD1) ☒ 100%(CD2) ☐ 90%(CD2) ☐ IFC
CAD File Name: FSM-GEN-PV-C02.dwg	CAD Plot Scale: 1:1	
Date: 2021-04-02	Drawn By: JLE	Checked By: LBR
A/E Project Number: 20-1089	Sheet Number: GEN PV6-003	

UNCLASSIFIED

8

UNCLASSIFIED

REFERENCES:

1. ROOF, CARPORT, & GROUND MOUNT PV ARRAYS OF 60 CELL MODULES IN SERIES STRINGS OF 14 TO 19 MODULES
2. ARRAY J-BOXES
3. INVERTER: SMA TRIPOWER CORE1 50-US (6 MPPT INPUTS)
4. AC COMBINER
5. TRANSFORMER
6. SOLAR A/C DISCONNECT INDOORS
7. TRANSFER SWITCH EXISTING
8. MAIN DISCONNECT - EXISTING
9. UTILITY METER - EXISTING
10. BATTERY STORAGE SYSTEM (BESS)
11. (NOT USED)
12. INVERTER AC DISCONNECT
13. AC LOAD PANEL - EXISTING
14. POWER ANALIZER
15. CONTROLLER / MONITOR
16. LINE SIDE TAP
17. WEATHER STATION
18. (NOT USED)
19. INTERNET
20. (NOT USED)
21. BATERY INVERTER / CHARGER
22. BATTERY STORAGE RACK + BMS

X. STRING ID LEGEND: FIRST NUMBER INDICATES WHICH PV INVERTER, LETTER CORRESPONDS TO INPUT LABELS ON INVERTER, LAST NUMBER IDENTIFIES PARALLEL STRINGS ON THE SAME INPUT.

NOTES:

1. ENSURE CONFIGURATION WITH GENERATOR CONTROLS THAT WILL NOT ALLOW PARALLEL OPERATION.
2. ALL DC POSITIVE CONDUCTOR TO BE RED OR MARKED WITH RED TAPE, ALL UNDERGROUND DC NEGATIVE CONDUCTORS TO BE BLACK TO INDICATE POLARITY AT ALL CONNECTIONS AND JUNCTION BOXES.
3. ALL EQUIPMENT GROUNDING CONDUCTORS TO BE BARE COPPER, GREEN OR MARKED WITH GREEN TAPE.
4. SEE GEN-PV6-001 FOR COMPLETE KEY REFERENCES LIST, INCLUDING WIRE AND CONDUIT SIZES
5. NEUTRAL BONDED TO GROUND ONLY AT MAIN DISCONNECT AND SECONDARY SIDE OF BESS TRANSFORMER.
6. LINE SIDE TAP AT MAIN DISCONNECT ALLOWED AS PER NEC REQUIREMENTS, VIA PIERCING TAP CONNECTORS
7. ETH - ETHERNET COMMUNICATIONS CONNECTOR
8. ALL PV AND BATTERY INVERTERS LIMITED BY SUNSPEC MODBUS CONTROL SYSTEM PER NEC 2020, 705.13

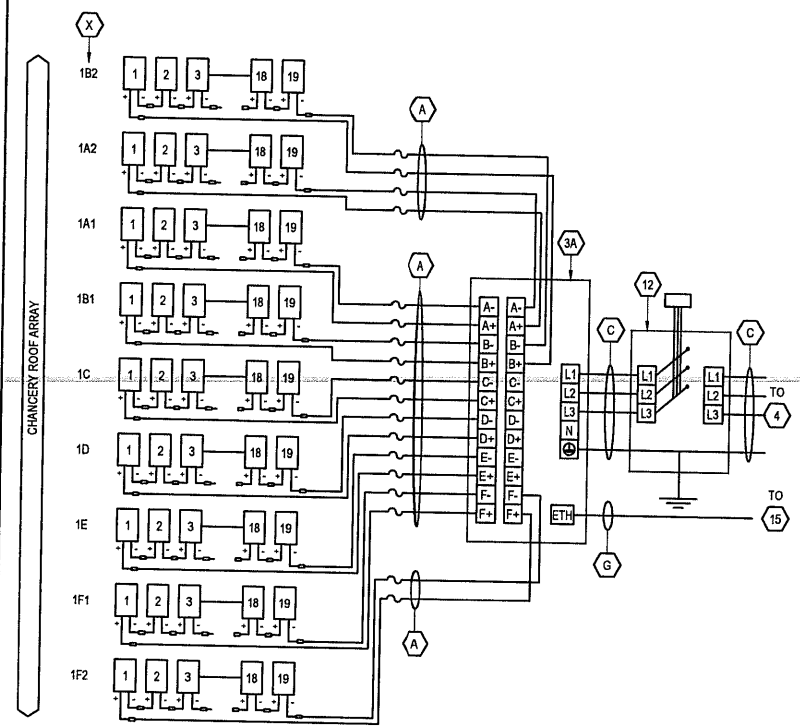

ELECTRICAL 3-LINE DIAGRAM | NTS | 1 | K18A10

UNCLASSIFIED

United States Department of State
OVERSEAS BUILDINGS OPERATIONS
Washington, D.C.

ENERGY CONSERVATION MEASURES AT U.S. EMBASSY KOLONIA FEDERATED STATES OF MICRONESIA

WARNING: This document is the property of the U.S. Government. Further reproduction and/or distribution is prohibited without the express written permission of Office of Overseas Buildings Operations, U.S. Department of State, Washington, DC. 20520. Information on this document is not to be altered except with the written approval of the individual whose seal appears hereon.

Rev #	Description	Date

RME Electric Corporation
19160 Smith Road
Aurora, CO 80011, USA

Hollingsworth-Pack Corporation
201 Penniman Rd.
Williamsburg, VA 23185, USA

Global Solace Inc.
20530 Beallsville Rd.
Beallsville, MD 20839, USA
tel 000.000.0000

Release For Construction:
A/OBO/PE/PM | A/OBO/PE/DE

Drawing Title:
ELECTRICAL 3-LINE DIAGRAMS
PHOTOVOLTAIC SYSTEM

OBO Project Number	Drawing Scale	Phase
19GE5019C0028	NTS	☐ 35%(CD1) ☐ 100%(CD3) ☐ 60%(CD1) ☐ 100%(CD2) ☐ 90%(CD2) ☐ IFC
CAD File Name: FSM-GEN-PV-CO2.dwg	CAD Plot Scale: 1:1	

Date: 2021/04/02
Drawn By: J.E
Checked By: LBR
AE Project Number: 20-1065
Sheet Number: **GEN PV6-004**

UNCLASSIFIED

9

UNCLASSIFIED

REFERENCES:

1. ROOF, CARPORT & GROUND MOUNT PV ARRAYS OF 60 CELL MODULES IN SERIES STRINGS OF 14 TO 19 MODULES
2. ARRAY J-BOXES
3. INVERTER: (x 4) SMA TRIPOWER CORE1 50-US (6 MPPT INPUTS)
4. AC COMBINER
5. TRANSFORMER
6. SOLAR A/C SERVICE DISCONNECT INDOORS
7. TRANSFER SWITCH EXISTING
8. MAIN DISCONNECT - EXISTING
9. UTILITY METER - EXISTING
10. BATTERY STORAGE SYSTEM (BESS)
11. (UNUSED)
12. INVERTER AC DISCONNECT
13. AC LOAD PANEL - EXISTING
14. POWER ANALIZER
15. CONTROLLER / MONITOR
16. LINE SIDE TAP
17. WEATHER STATION
18. (NOT USED)
19. INTERNET
20. (NOT USED)
21. BATTERY INVERTER/ CHARGER
22. BATTERY STORAGE RACK + BMS
26. HVAC IN BESS UNITS

X. STRING ID LEGEND: FIRST NUMBER INDICATES WHICH PV INVERTER, LETTER CORRESPONDS TO INPUT ON INVERTER, LAST NUMBER IDENTIFIES PARALLEL STRINGS ON THE SAME INPUT

NOTES:

1. ENSURE CONFIGURATION WITH GENERATOR CONTROLS THAT WILL NOT ALLOW PARALLEL OPERATION.
2. ALL DC POSITIVE CONDUCTOR TO BE RED OR MARKED WITH RED TAPE, ALL UNDERGROUND DC NEGATIVE CONDUCTORS TO BE BLACK TO INDICATE POLARITY AT ALL CONNECTIONS AND JUNCTION BOXES.
3. ALL EQUIPMENT GROUNDING CONDUCTORS TO BE BARE COPPER, GREEN OR MARKED WITH GREEN TAPE.
4. SEE GEN-PV6-001 FOR COMPLETE KEY REFERENCES LIST, INCLUDING WIRE AND CONDUIT SIZES
5. NEUTRAL BONDED TO GROUND ONLY AT MAIN DISCONNECT AND SECONDARY SIDE OF BESS TRANSFORMER.
6. LINE SIDE TAP AT MAIN DISCONNECT ALLOWED AS PER NEC REQUIREMENTS, VIA PIERCING TAP CONNECTORS
7. ETH - ETHERNET COMMUNICATIONS CONNECTOR
8. SECURE FORMAL APPROVAL BY UTILITY, AHJ, OWNER, AND ENGINEER FOR ALL THE PROPOSED MEANS AND METHODS OF EXISTING SERVICE FEEDER INTERCEPTION, CTS, ENCLOSURE TYPE AND LOCATION, OUTAGE, BACK UP POWER, ETC
9. ALL PV AND BATTERY INVERTERS LIMITED BY SUNSPEC MODBUS CONTROL SYSTEM PER NEC 2020, 705.13

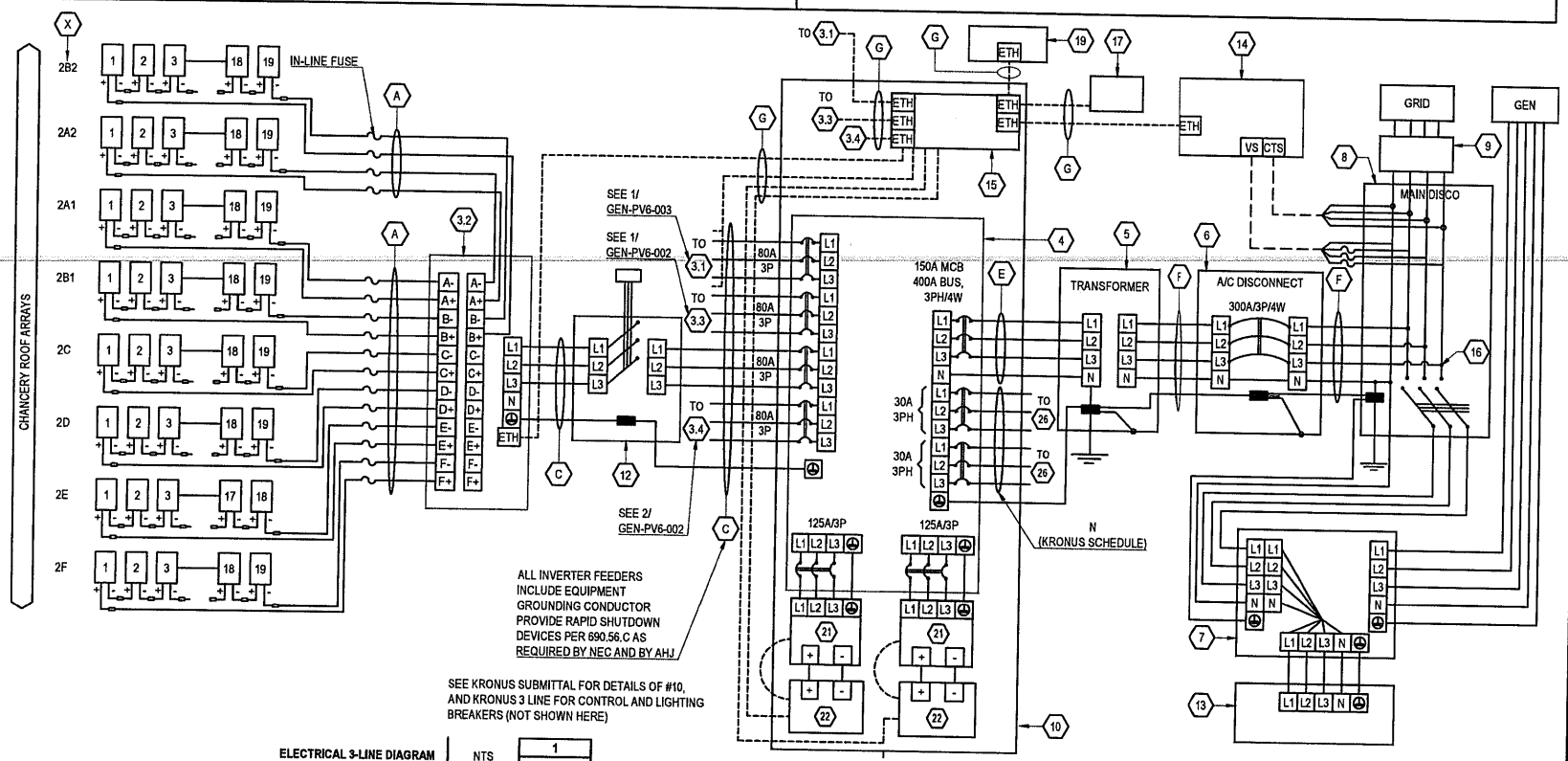

ELECTRICAL 3-LINE DIAGRAM | NTS | 1 / H18A1

UNCLASSIFIED

United States Department of State
OVERSEAS BUILDINGS OPERATIONS
Washington, D.C.

ENERGY CONSERVATION MEASURES AT U.S. EMBASSY KOLONIA FEDERATED STATES OF MICRONESIA

WARNING: This document is the property of the U.S. Government. Further reproduction and/or distribution is prohibited without the express written permission of: Office of Overseas Buildings Operations, U.S. Department of State, Washington, DC, 20520. Information on this document is not to be altered except with the written approval of the individual whose seal appears hereon.

Rev #	Description	Date

RME Electric Corporation
19180 Smith Road
Aurora, CO 80011, USA

Hollingsworth-Peck Corporation
201 Penniman Rd.
Williamsburg, VA 23185, USA

Global Solace Inc.
20530 Beallsville Rd.
Beallsville, MD 20839, USA
tel 000.000.0000

Release For Construction
A/OBO/PE/PM | A/OBO/PE/EOE

Drawing Title: **ELECTRICAL 3-LINE DIAGRAMS PHOTOVOLTAIC SYSTEM**

OBO Project Number: 19GE5019C0020
CAD File Name: FSM-GEN-PV-C02.dwg
Drawing Scale: NTS
CAD Plot Scale: 1:1
Phase: ☐ 35%(CD1) ☐ 100%(CD3) ☐ 60%(CD1) ☒ 100%(CD3) ☐ 90%(CD2) ☐ IFC
Date: 2021/04/02
Drawn By: JJE
Checked By: LBR
AE Project Number: 20-1089
Sheet Number: **GEN PV6-005**

UNCLASSIFIED

10

UNCLASSIFIED

KEY REFERENCES:

3. (A-B-D) 3 INVERTERS
   SMA TRIPOWER CORE1 50-US
   (C) INVERTER
   SMA TRIPOWER CORE1 33-US
   (6 MPPT INPUTS)
14. POWER ANALIZER
15. CONTROLLER / MONITOR
17. WEATHER STATION
19. INTERNET ACCESS
21. BATTERY INVERTER / CHARGER
22. BATTERY STORAGE RACK + BMS

NOTES:

1. COMMUNICATION WIRES RUN BETWEEN DEVICES WILL BE IN 19MM, PARALLEL TO ELECTRIC WIRE CONDUIT, SECURED WITH STAINLESS STEEL CLAMPS AND UNISTRUT AS REQUIRED.
2. ETH - ETHERNET COMMUNICATIONS CONNECTOR.
3. ROUTER BUILT INTO AGETO ARC COMPUTER.
4. INVERTERS ARE DAISY CHAINED TOGETHER.
5. POWER ANALYZER CTS LOCATED BETWEEN 9.UTILITY METER AND 8.MAIN DISCONNECT IN STAINLESS STEEL BOX.
6. 24V DC POWER SUPPLY FOR 14.POWER ANALYZER PLUGGED IN ELECTRICAL ROOM.
7. 120 VAC FOR 15.AGETO ARC COMPUTER CONNECTED TO BESS LOADS PANEL.

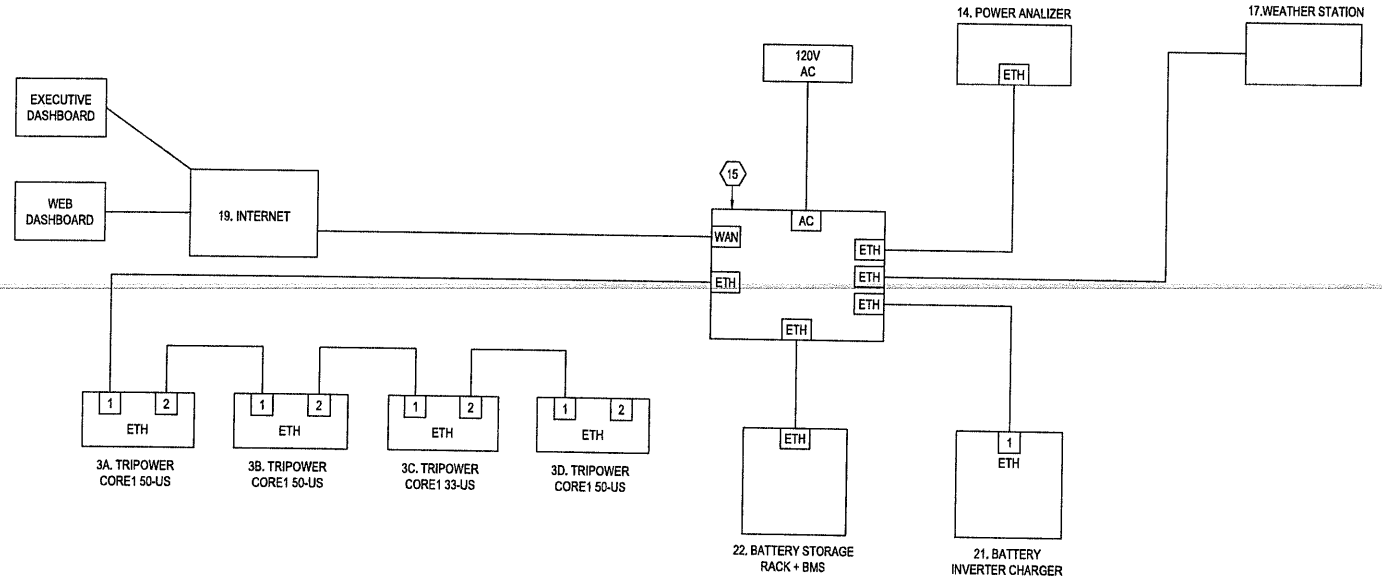

BLOCK DIAGRAM | NTS | 1 / K18A1

UNCLASSIFIED

United States Department of State
OVERSEAS BUILDINGS OPERATIONS
Washington, D.C.

ENERGY CONSERVATION MEASURES AT U.S. EMBASSY KOLONIA FEDERATED STATES OF MICRONESIA

WARNING: This document is the property of the U.S. Government. Further reproduction and/or distribution is prohibited without the express written permission of: Office of Overseas Buildings Operations, U.S. Department of State, Washington, DC, 20520. Information on this document is not to be altered except with the written approval of the individual whose seal appears hereon.

Rev #	Description	Date

RME Electric Corporation
19160 Smith Road
Aurora, CO 80011, USA

Hollingsworth-Pack Corporation
201 Fenstman Rd.
Williamsburg, VA 23185, USA

Global Solace Inc.
20530 Beallsville Rd.
Beallsville, MD 20839, USA
tel 000.000.0000

Release For Construction:
A/OBO/PE/PM | A/OBO/PE/SDE

Drawing Title
MONITORING SYSTEM BLOCK DIAGRAM PHOTOVOLTAIC SYSTEM

OBO Project Number: 19GE5019C0028	Drawing Scale: NTS	Phase: ☐ 35%(CD1) ☐ 100%(CD3) ☐ 60%(CD1) ☒ 100%(CD2) ☐ 90%(CD2) ☐ IFC
CAD File Name: FSM-GEN-PV-CO2.dwg	CAD Plot Scale: 1:1	
	Date: 2021/01/28	Sheet Number: GEN PV6-006
	Drawn By: J.E	
	Checked By: LBR	
	A/E Project Number: 20-1089	

UNCLASSIFIED

11

UNCLASSIFIED

REFERENCES:

- - - · - · - PROPERTY LINE

— SF — SF — SILT FENCE

FIELD VERIFY EXACT LOCATION WITH SITE TOPOGRAPHY, LANDSCAPING AND AREA OF WORK

1. LAYDOWN AND SPOILS STORAGE AND TEMPORARY OFFICES AREA
2. APPROXIMATE LOCATION OF LAYDOWN AND CONSTRUCTION OFFICES. IT IS A LOCAL CONSTRUCTION COMPANY LAYDOWN AREA BEING RENTED.

(XX) NOTES:

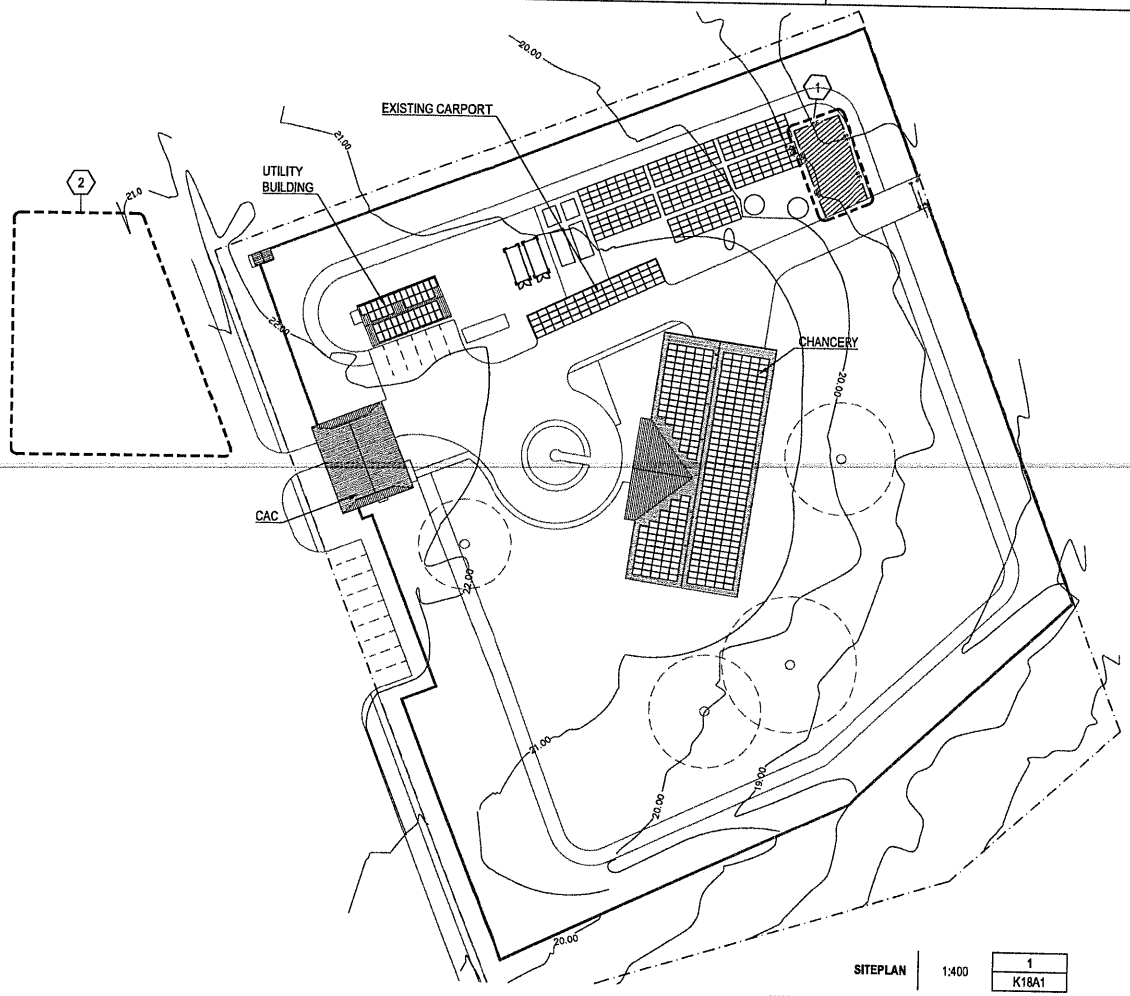

SITEPLAN 1:400 1 K18A1

UNCLASSIFIED

United States Department of State
OVERSEAS BUILDINGS OPERATIONS
Washington, D.C.

ENERGY CONSERVATION MEASURES AT U.S. EMBASSY KOLONIA FEDERATED STATES OF MICRONESIA

WARNING: This document is the property of the U.S. Government. Further reproduction and/or distribution is prohibited without the express written permission of: Office of Overseas Buildings Operations, U.S. Department of State, Washington, DC, 20520. Information on this document is not to be altered except with the written approval of the individual whose seal appears hereon.

1:400 0 8000 16000 32000 0.00°

Rev #	Description	Date

RME Electric Corporation
19160 Smith Road
Aurora, CO 80011, USA

Hollingsworth-Pack Corporation
201 Penninian Rd,
Williamsburg, VA 23185, USA

Global Solace Inc.
20530 Beallsville Rd,
Beallsville, MD 20839, USA
tel 000.000.0000

Release For Construction:

A/OBO/PE/PM	A/OBO/PE/ROE

Drawing Title: SITEPLAN

CIVIL

OBO Project Number: 19GE5019C0028	Drawing Scale: 1:400	Phase: ☐ 35%(CD1) ☐ 100%(CD3) ☐ 60%(CD1) ☒ 100%(CD2) ☐ 90%(CD2) ☐ IFC
CAD File Name: FSM-CMPD-C-CD2.dwg	CAD Plot Scale: 1:1	
	Date: 2021/01/26	Sheet Number: CMPD C1-001
	Drawn By: J.E	
	Checked By: CHE	
	A/E Project Number: 20-1009	

UNCLASSIFIED

12

UNCLASSIFIED

REFERENCES:

- —+— POSITIVE HOME RUN WIRES
- — - — NEGATIVE HOME RUN WIRES
- — — — MODULE STRINGS

3.1, 3.2 SMA TRIPOWER CORE1 50-US INVERTER
17. WEATHER STATION

NOTES:

1. SECURE ALL HOME RUN WIRING TO MOUNTING RAIL.
2. BOND EACH SUBARRAY EQUIPMENT GROUND PV RACKING.
3. MONITORING CONDUIT RUNS PARALLEL WITH AND ATTACHED TO THE ELECTRICAL CONDUIT FROM THE ATTIC AND ALONG UNDERGROUND FEED TO UTILITY BUILDING.
4. MONITORING CONDUIT RUNS FROM WEATHER STATION TO INVERTER AREA AND THEN UNDERGROUND TO UTILITY BUILDING.
5. ALTERNATIVE STRINGS LAYOUTS ALLOWED.
6. INVERTERS 3.1 AND 3.2 LOCATED AT REAR OF BUILDING.
7. EAST SIDE STRINGS WIRED IN LEAP FROG WIRING TO REDUCE WIRE LOSSES.

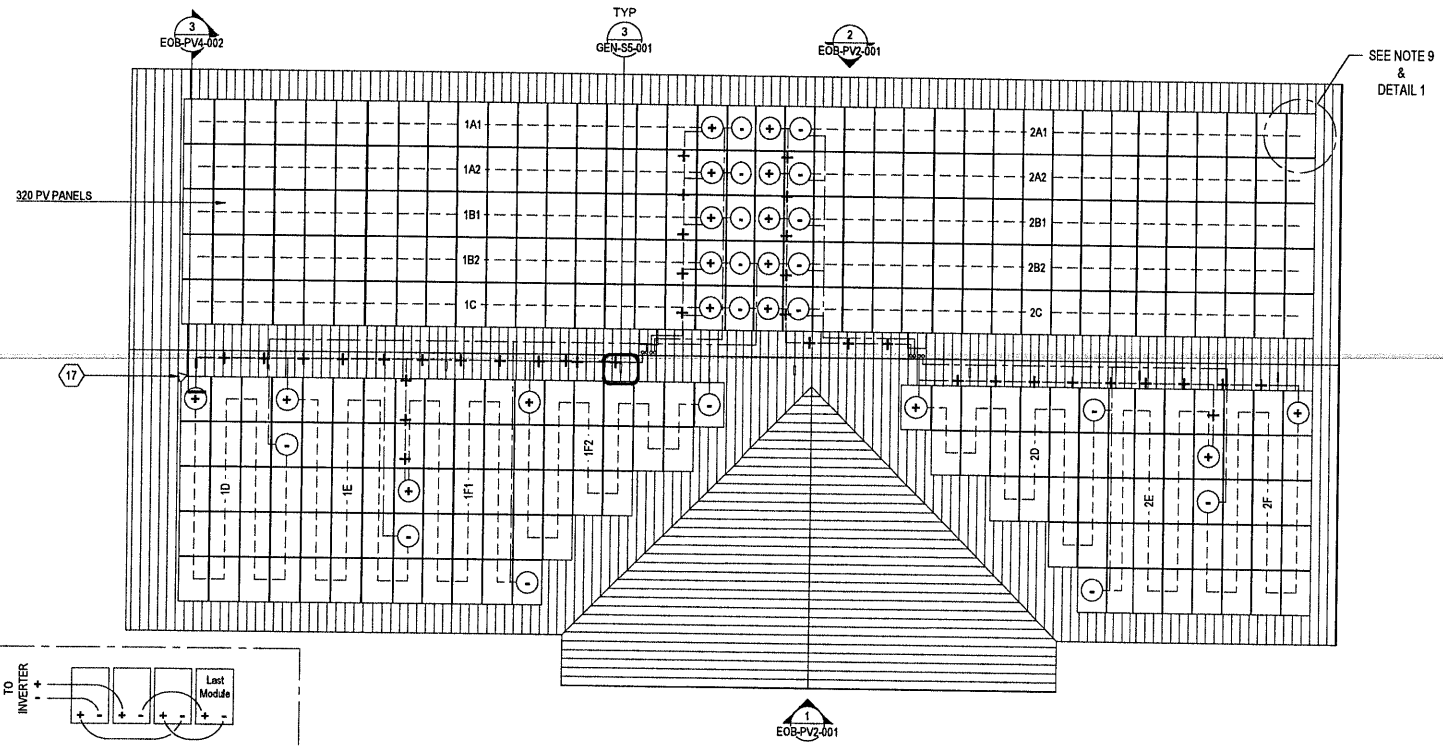

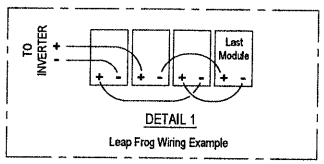

DETAIL 1

Leap Frog Wiring Example

ROOF PLAN | 1:75 | 1 / K18A1

UNCLASSIFIED

United States Department of State
OVERSEAS BUILDINGS OPERATIONS
Washington, D.C.

ENERGY CONSERVATION MEASURES AT U.S. EMBASSY KOLONIA FEDERATED STATES OF MICRONESIA

WARNING: This document is the property of the U.S. Government. Further reproduction and/or distribution is prohibited without the express written permission of Office of Overseas Buildings Operations, U.S. Department of State, Washington, DC 20520. Information on this document is not to be altered except with the written approval of the individual whose seal appears hereon.

1:75 — 0 1500 3000 6000 — 8.23"

Rev #	Description	Date

RME Electric Corporation
19190 Smith Road
Aurora, CO 80011, USA

Hollingsworth-Pack Corporation
201 Penniman Rd
Williamsburg, VA 23185, USA

Global Solace
Global Solace Inc.
20530 Beallsville Rd
Beallsville MD 20839, USA
tel 000.000.0000

Release For Construction:
A/OBO/PE/PM | A/OBO/PE/DE

Drawing Title: ROOF PLAN
PHOTOVOLTAIC SYSTEM

OBO Project Number	19GES0190028	Drawing Scale	1:75
CAD File Name	FSM-EOB-PV-C02.dwg	CAD Plot Scale	1:1
Phase	☐ 35%(CD1) ☐ 100%(CD3) ☐ 65%(CD1) ☒ 100%(CD2) ☐ 90%(CD2) ☐ IFC		
Date	2021/04/02	Sheet Number	EOB PV1-001
Drawn By	JLE		
Checked By	LBR		
A/E Project Number	20-1089		

UNCLASSIFIED

13

UNCLASSIFIED

REFERENCES:	NOTES:
STANDING SEAM METAL ROOF	1. ALL RAILS ARE STANDARD 4.26M SIZE
S-5-U MINI CLAMP AND L-FOOT ATTACHMENT TO STANDING SEAM METAL ROOF	2. 2 CLAMPS AT THE END OF EACH RAIL, 1 CLAMP EVERY 3RD STANDING SEAM
UNIRAC SOLARMOUNT HEAVY DUTY 'HD' RAIL	
RAIL SPLICE PLATE	

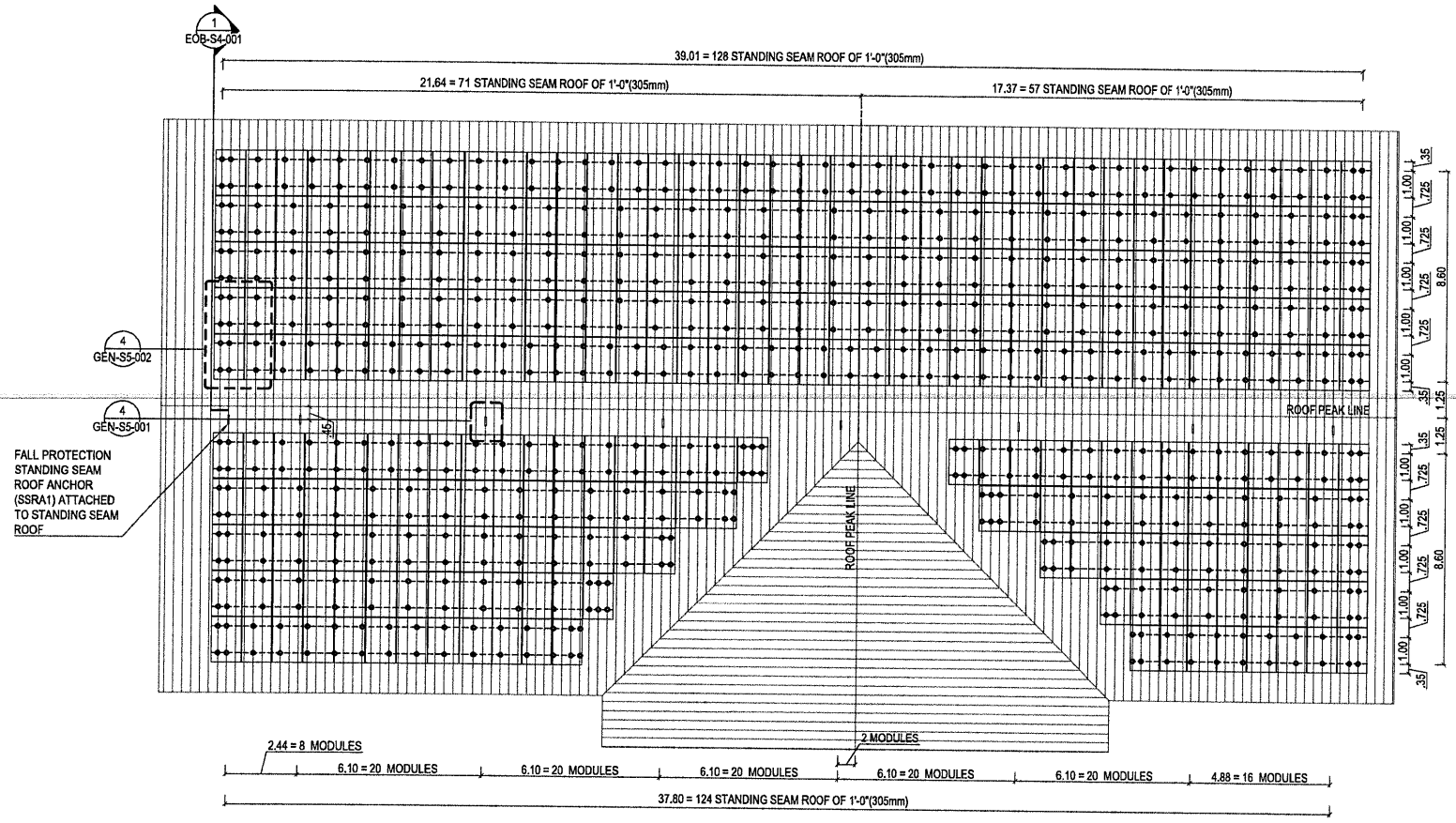

RAIL CONFIGURATION PLAN | 1:75 | 1 / K18A1

UNCLASSIFIED

United States Department of State
OVERSEAS BUILDINGS OPERATIONS
Washington, D.C.

ENERGY CONSERVATION MEASURES AT U.S. EMBASSY KOLONIA FEDERATED STATES OF MICRONESIA

WARNING: This document is the property of the U.S. Government. Further reproduction and/or distribution is prohibited without the express written permission of: Office of Overseas Buildings Operations, U.S. Department of State, Washington, DC, 20520. Information on this document is not to be altered except with the written approval of the individual whose seal appears hereon.

1:75
0 1500 3000 6000
0.00°

Rev #	Description	Date

RME Electric Corporation
19160 Smith Road
Aurora, CO 80011, USA

Hollingsworth-Pack Corporation
201 Penniman Rd.
Williamsburg, VA 23185, USA

Global Solace Inc.
20530 Beallsville Rd.
Beallsville, MD 20839, USA
tel 000.000.0000

Release For Construction
A/OBO/PE/PM | A/OBO/PE/BDE

Drawing Title
RAIL CONFIGURATION PLAN
STRUCTURAL

OBO Project Number 19OES019C0028	Drawing Scale 1:75	Plans ☐ 35%(CD1) ☐ 100%(CD3)
CAD File Name FSM-EOB-S-CD2.dwg	CAD Plot Scale 1:1	☐ 60%(CD1) ☒ 100%(CD2) ☐ 90%(CD2) ☐ IFC
	Date 2021/01/28	Sheet Number EOB S1-001
	Drawn By JLE	
	Checked By SAU	
	A/E Project Number 20-1083	

UNCLASSIFIED

14

UNCLASSIFIED

REFERENCES:	NOTES:
3C - SMA TRIPOWER CORE1 50-US INVERTER. UTILITY BUILDING SOLAR RUNS TO THIS INVERTER AND SHARES WITH PARKING COVER SOLAR	1. SEE GEN-PV6-001 FOR COMPLETE KEY REFERENCES LIST, INCLUDING WIRE AND CONDUIT SIZES. 2. UNDERGROUND FEED TO BESS CONTAINER, AC COMBINER 3. ARRAY WIRING TO BE SECURED ACCORDING TO INDUSTRY BEST PRACTICES, NO WIRES ALLOWED TO EXTEND BELOW STRUCTURAL BEAMS, ATTACHMENTS TO BE STAINLESS CLIPS, STAINLESS RUBBER COATED LOOM CLAMPS, CR STAINLESS CABLE TRAY, ZIP TIES, IF USED, SHALL BE UV RATED AND USED FOR ORGANIZATIONAL PURPOSES, NOT STRUCTURAL ATTACHMENT.

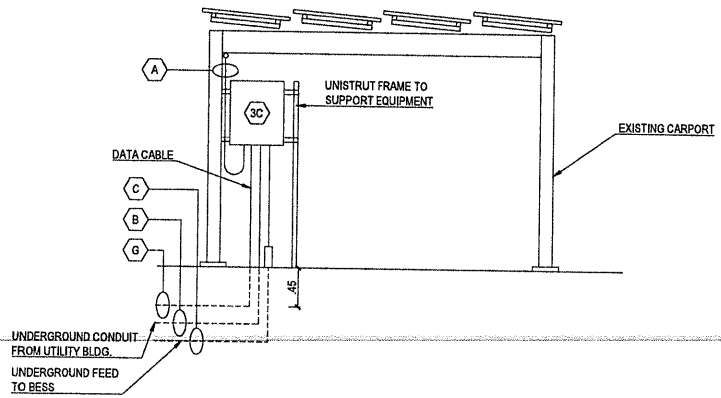

ELEVATION 1:25 1 / K18E1

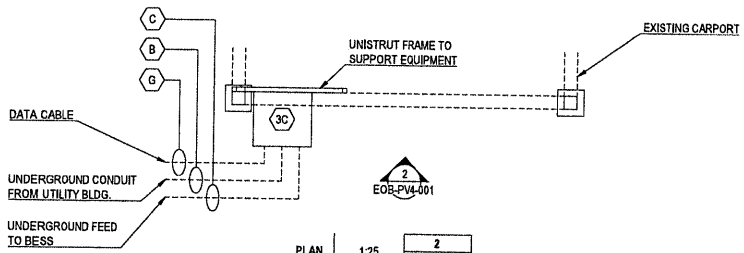

PLAN 1:25 2 / D18A1

UNCLASSIFIED

United States Department of State
OVERSEAS BUILDINGS OPERATIONS
Washington, D.C.

ENERGY CONSERVATION MEASURES AT U.S. EMBASSY KOLONIA FEDERATED STATES OF MICRONESIA

WARNING: This document is the property of the U.S. Government. Further reproduction and/or distribution is prohibited without the express written permission of Office of Overseas Buildings Operations, U.S. Department of State, Washington, DC 20520. Information on this document is not to be altered except with the written approval of the individual whose seal appears hereon.

1:25 0 500 1000 2000 22.49°

Rev #	Description	Date

RME Electric Corporation
18180 Smith Road
Aurora, CO 80011, USA

HollingsworthPack Corporation
201 Penniman Rd.
Williamsburg VA 23185, USA

Global Solace Inc.
20530 Beallsville Rd.
Beallsville,MD 20839, USA
tel 000.000.0000

Release For Construction:
A/OBO/PE/PM A/OBO/PE/BDE

Drawing Title
EQUIPMENT AREAS ENLARGEMENT PHOTOVOLTAIC SYSTEM

OBO Project Number 19GE5019C0029	Drawing Scale 1:25	Date ☐ 35%(CD1) ☐ 100%(CD3) ☐ 60%(CD1) ☒ 100%(CD2) ☐ 80%(CD2) ☐ IFC
CAD File Name F:\SAP\KO-PV-CD2.dwg	CAD Plot Scale 1:1	
	Date 2021.04.02	Sheet Number PKG PV4-001
	Drawn By JLE	
	Checked By LBK	
	A/E Project Number 20-1069	

UNCLASSIFIED

15

EQUIPMENT SCHEDULE							
ITEM	NAME	QTY	MAKE/ MODEL	VOLTAGE	AMPERAGE	KAIC RATING	DESCRIPTION
B1	BATTERY INVERTER	4	Oztek PCS RS40 .	400V AC, 300-800V DC	50A AC, 75A DC		Includes 63A AC Breaker UL 1741, UL 1741SA
B2	AC COMBINER	1	**see GEN PV6-001				
B3	EXISTING TRANSFORMER	1	**see GEN PV6-001				
B4	CONTROLLER / MONITOR	1	**see GEN PV6-001				
B5	BATTERY CABINET	11	Kore Power M1	450-756V DC	160A DC		72kWh, Includes 160A DC Fuse and DC Disconnect UL9540A, UL1973
B6	PD BLOCK	4	ilsco LDBU 16-500	1000V	380A		UL 1953
B7	POWER SUPPLY	8	WDR-480-24	480V DC	1.6A		24V DC POWER SUPPLY UL508
B8	HVAC UNIT	2	ThermoKing Magnum+	460V DC	25A		BUILT INTO CONTAINER
B9	DC SYSTEM LEVEL FUSE	2	SPFJ-200	1000V DC	200A		UL 248-8

Equipment Schedule

BESS WIRE/ CKT SCHEDULE					
CKT#	FROM	TO	CONDUIT (TYPE, SIZE)	CONDUCTORS	GROUNDING
H	CONTROL CABINET	CONTROL CABINET	NONE/ INTERNAL	#18 AWG CU 50VDC RATED	
J	FAN POWER SUPPLIES	FAN BUS	NONE/ INTERNAL	#12 AWG CU 50VDC RATED	
K	BATTERY PACKS	PD BLOCK	MESSENGER	#1 AWG CU 1000VDC RATED	
L	PD BLOCK	INVERTER	NONE	2/ 0 AWG CU 1000VDC RATED	
M	AC COMBINER	POWER SUPPLIES	EMT or Seal Tite if bend radius limitation	#14 AWG CU 600VDC RATED	#14 awg
N	AC COMBINER	HVAC	NONE	SO CABLE VENDOR SUPPLIED	

Wire and Conduit Schedule

United States Department of State
OVERSEAS BUILDINGS OPERATIONS
Washington, D.C.

ENERGY CONSERVATION MEASURES AT U.S. EMBASSY KOLONIA FEDERATED STATES OF MICRONESIA

WARNING: This document is the property of the U.S. Government. Further reproduction and/or distribution is prohibited without the express written permission of Office of Overseas Buildings Operations, U.S. Department of State, Washington, DC, 20520. Information on this document is not to be altered except with the written approval of the individual whose seal appears hereon.

Rev #	Description	Date

RME Electric Corporation
18160 Smith Road
Aurora, CO 80011, USA

Hollingsworth-Pack Corporation
201 Penniman Rd,
Williamsburg, VA 23185, USA

Global Solace Inc.
20530 Beallsville Rd,
Beallsville,MD 20839, USA
tel 000.000.0000

Kronus Engineering
Brian Banghart
M (303) 906-8957
W KronusEngineering.com

Release For Construction.

A/OBO/PE/PM	A/OBO/PE/BDE

Drawing Title: **REFERENCES BESS SYSTEM**

OBO Project Number 19GE5019C0028	Drawing Scale NTS	Phase ☐ 35%(CD1) ☐ 100%(CD3) ☐ 60%(CD1) ☒ 100%(CD2) ☐ 90%(CD2) ☐ IFC
CAD File Name FSM-GEN-PV-CD2.dwg	CAD Plot Scale 1:1	
Date 2021/04/01	Drawn By A.E	Sheet Number SPX Bess-001
Checked By LBR	RME Project Number 20-1089	

16

UNCLASSIFIED

References			
B1	Battery Inverter	B5	Battery Cabinet
B2	AC Combiner	B6	PD Block
		B7	Power Supply
B4	Comm Junction Box	B8	HVAC Unit

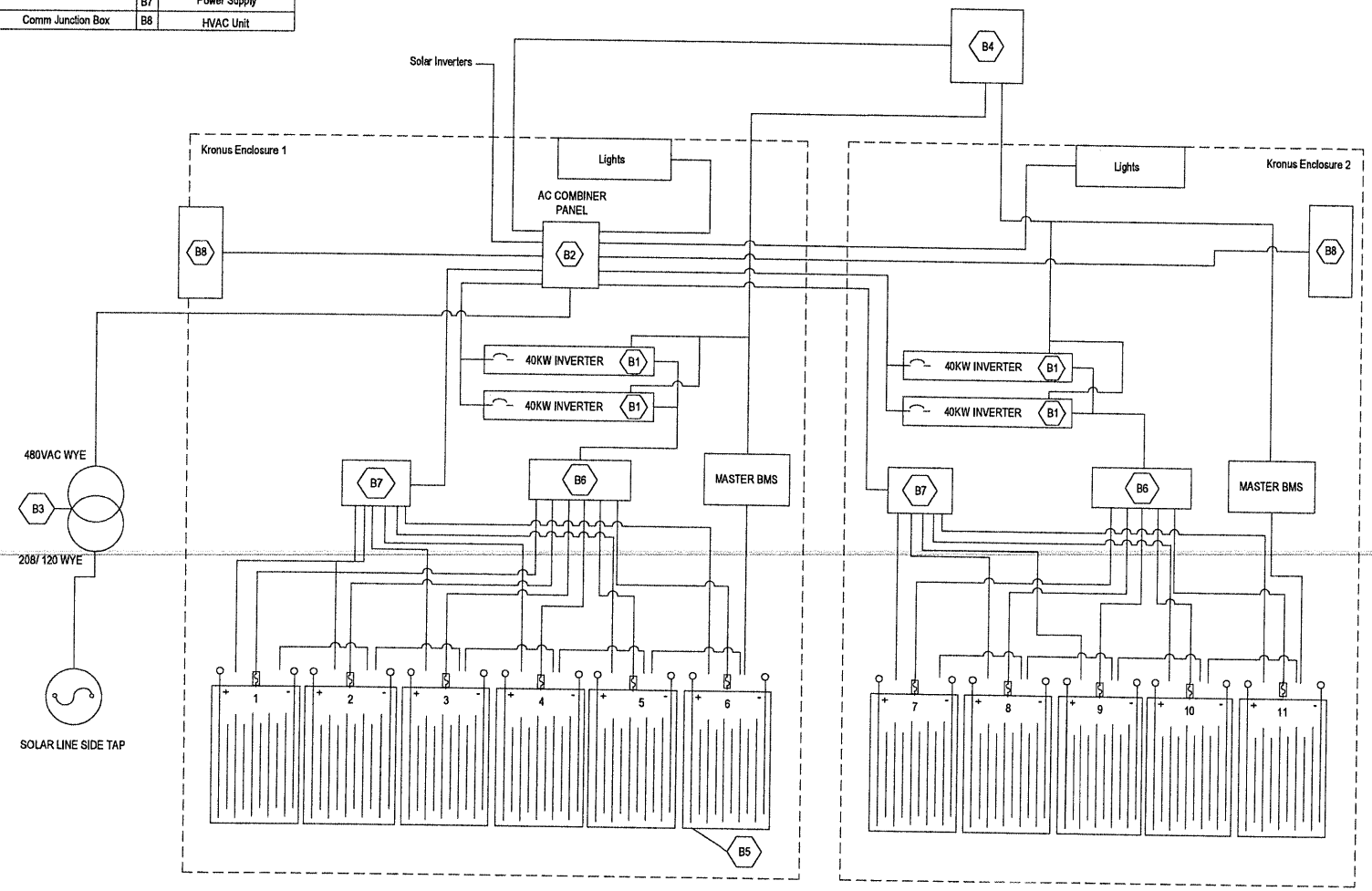

Communications
AC Bus
HV DC Bus
LV DC Bus

UNCLASSIFIED

United States Department of State
OVERSEAS BUILDINGS OPERATIONS
Washington, D.C.

ENERGY CONSERVATION MEASURES AT U.S. EMBASSY KOLONIA FEDERATED STATES OF MICRONESIA

WARNING This document is the property of the U.S. Government. Further reproduction and/or distribution is prohibited without the express written permission of Office of Overseas Buildings Operations, U.S. Department of State, Washington, DC, 20520. Information on this document is not to be altered except with the written approval of the individual whose seal appears hereon.

Rev #	Description	Date

RME Electric Corporation
19160 Smith Road
Aurora, CO 80011, USA

Hollingsworth-Pack Corporation
201 Penniman Rd.
Williamsburg, VA 23185, USA

Global Solace Inc.
20530 Beallsville Rd.
Beallsville,MD 20839, USA
tel 000.000.0000

Kronus Engineering
Brian Berghart
M: (303) 908-8957
W: KronusEngineering.com

Release For Construction
A/OBO/PEPM | A/OBO/PE&DE

Drawing Title
ONE LINE DIAGRAM WITH COMM's KOLONIA

OBO Project Number: 19GES019C0028
CAD File name: SPX-BESS-00.dwg
Drawing Scale: NTS
CAD Plot Scale: 1:1
Phase: ☐ 35%(CD1) ☐ 100%(CD3) ☐ 60%(CD1) ☒ 100%(CD2) ☐ 90%(CD2) ☐ IFC
Date: 2/21/04/02
Drawn By: J.E
Checked By: LBB
A/E Project Number: 25-1989
Sheet Number: SPX Bess-002

UNCLASSIFIED

17

References	
B5	Battery Cabinet

UNCLASSIFIED

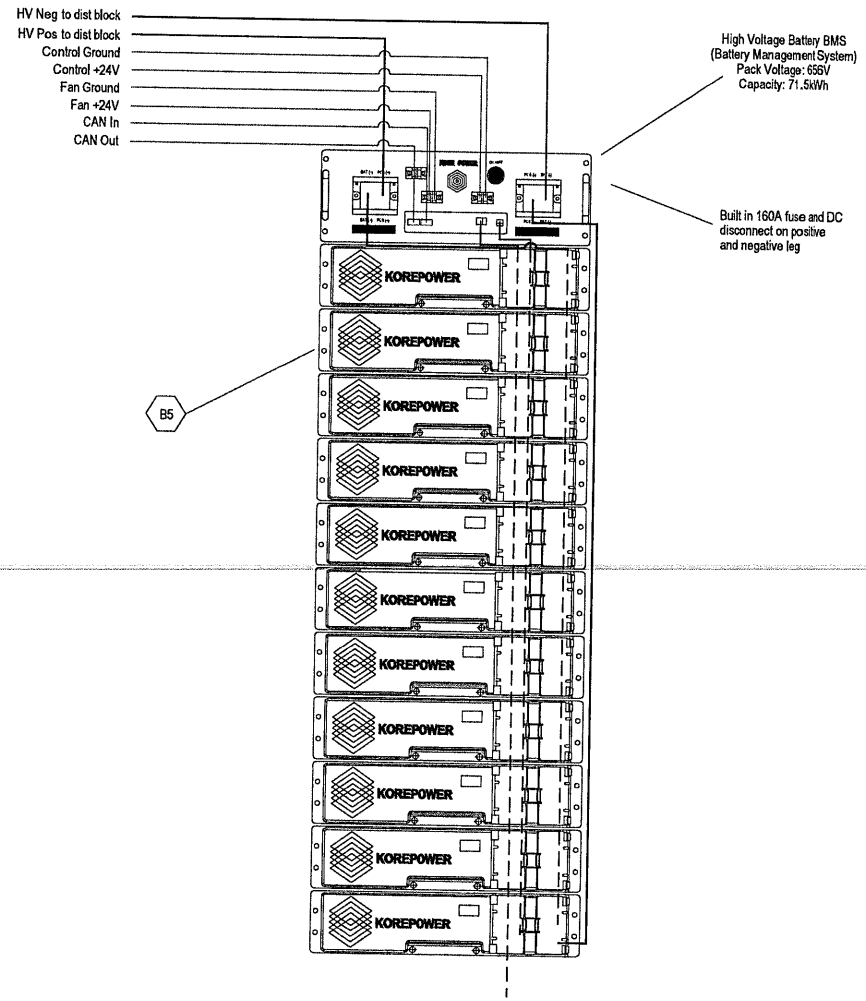

United States Department of State
OVERSEAS BUILDINGS OPERATIONS
Washington, D.C.

ENERGY CONSERVATION MEASURES AT U.S. EMBASSY KOLONIA FEDERATED STATES OF MICRONESIA

WARNING: This document is the property of the U.S. Government. Further reproduction and/or distribution is prohibited without the express written permission of: Office of Overseas Buildings Operations, U.S. Department of State, Washington, DC, 20520. Information on this document is not to be altered except with the written approval of the individual whose seal appears hereon.

Rev #	Description	Date

RME Electric Corporation
15168 Smith Road
Aurora, CO 80011, USA

Hollingsworth-Pack Corporation
201 Penniman Rd.
Williamsburg, VA 23185, USA

Global Solace Inc.
20530 Beallsville Rd.
Beallsville,MD 20839, USA
tel 000.000.0000

Kronus Engineering
Brian Banghart
M (303) 949-8957
W KronusEngineering.com

Release For Construction:

A/OBO/PE/PM	A/OBO/PE/SDE

Drawing Title: **TYPICAL BATTERY CABINET KOLONIA**

OBO Project Number	Drawing Scale	Phase
19GE5619C00228	NTS	☐ 35%(CD1) ☐ 100%(CD3)
CAD File Name: FSM-GEN-PV-C02.dwg	CAD Plot Scale: 1:1	☐ 60%(CD1) ☒ 100%(CD2) ☐ IFC

Date	Sheet Number
2021/04/02	SPX Bess-003
Drawn By: JLE	
Checked By: LBR	
A/E Project Number: 20-1089	

UNCLASSIFIED

REFERENCES					
B1	Battery Inverter	B5	Battery Cabinet	B7	Power Supply

UNCLASSIFIED

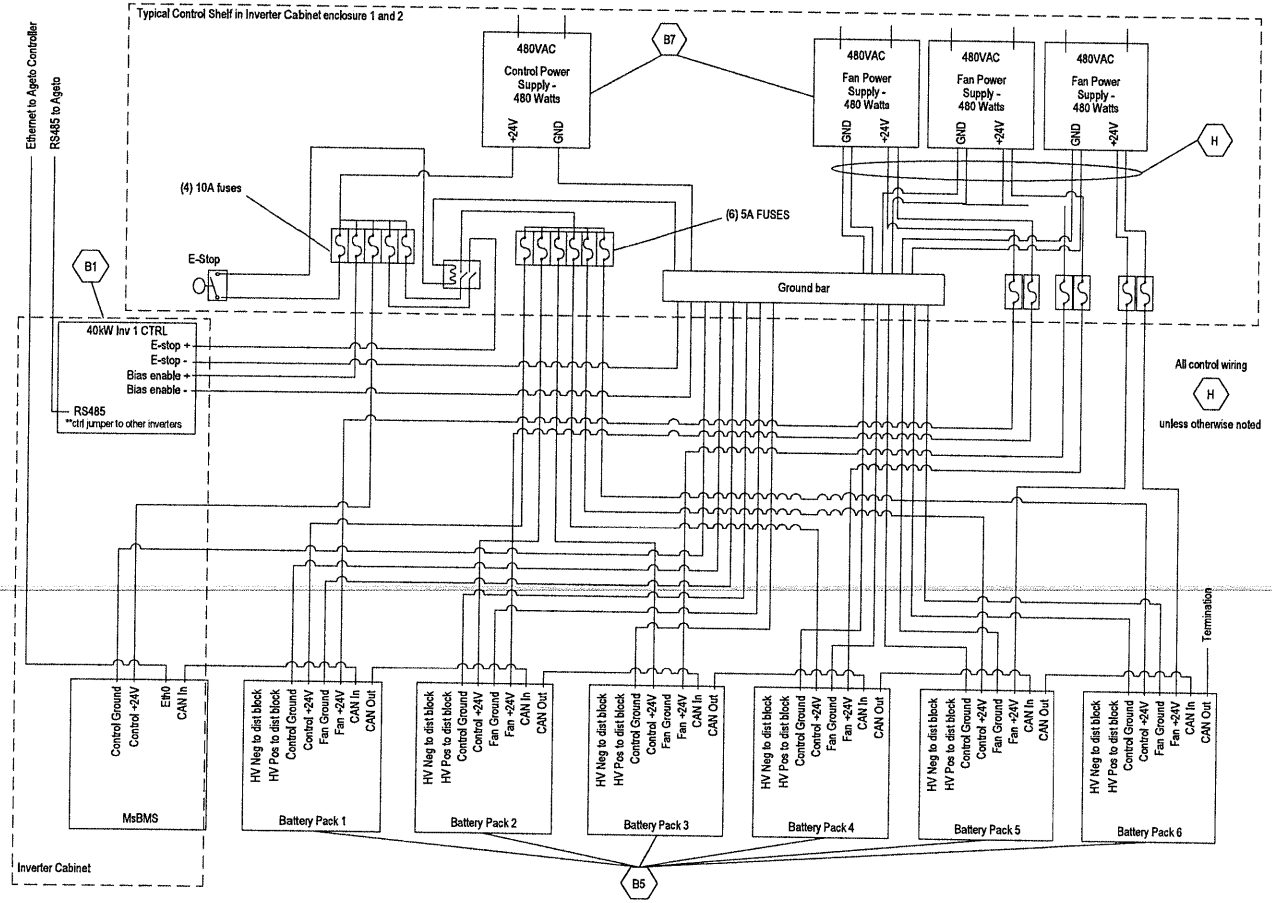

UNCLASSIFIED

United States Department of State
OVERSEAS BUILDINGS OPERATIONS
Washington, D.C.

ENERGY CONSERVATION MEASURES AT U.S. EMBASSY KOLONIA FEDERATED STATES OF MICRONESIA

WARNING: This document is the property of the U.S. Government. Further reproduction and/or distribution is prohibited without the express written permission of Office of Overseas Buildings Operations, U.S. Department of State, Washington, DC, 20520. Information on this document is not to be altered except with the written approval of the individual whose seal appears hereon.

Rev #	Description	Date

RME Electric Corporation
19160 Smith Road
Aurora, CO 80011, USA

Hollingsworth-Pack Corporation
201 Peninsula Rd.
Williamsburg, VA 23185, USA

Global Solace
Global Solace Inc.
20530 Beallsville Rd.
Beallsville,MD 20839, USA
tel 000.000.0000

Kronus Engineering
Brian Barghart
M: (303) 905-8857
W: KronusEngineering.com

Release For Construction:
A/OBO/PE/PM | A/OBO/PE/SDE

Drawing Title
TYPICAL CONTROLS and COMMUNICATIONS (2 in SYSTEM)

OBO Project Number	Drawing Scale	Phase
19GE5019C0028	NTS	☐ 35%(CD1) ☐ 100%(CD3)
CAD File Name: SPX-BESS-00.dwg	CAD File Scale: 1:1	☐ 60%(CD1) ☐ 100%(CD3) ☐ 90%(CD2) ☐ IFC

Date: 2/21/0402
Drawn By: JLE
Checked By: LBF
A/E Project Number: 23-1089
Sheet Number: **SPX BESS-004**

UNCLASSIFIED

19

References					
B1	Battery Inverter	B6	PD Block	B9	DC System Fusing
B5	Battery Cabinet	B7	Power Supply		

UNCLASSIFIED

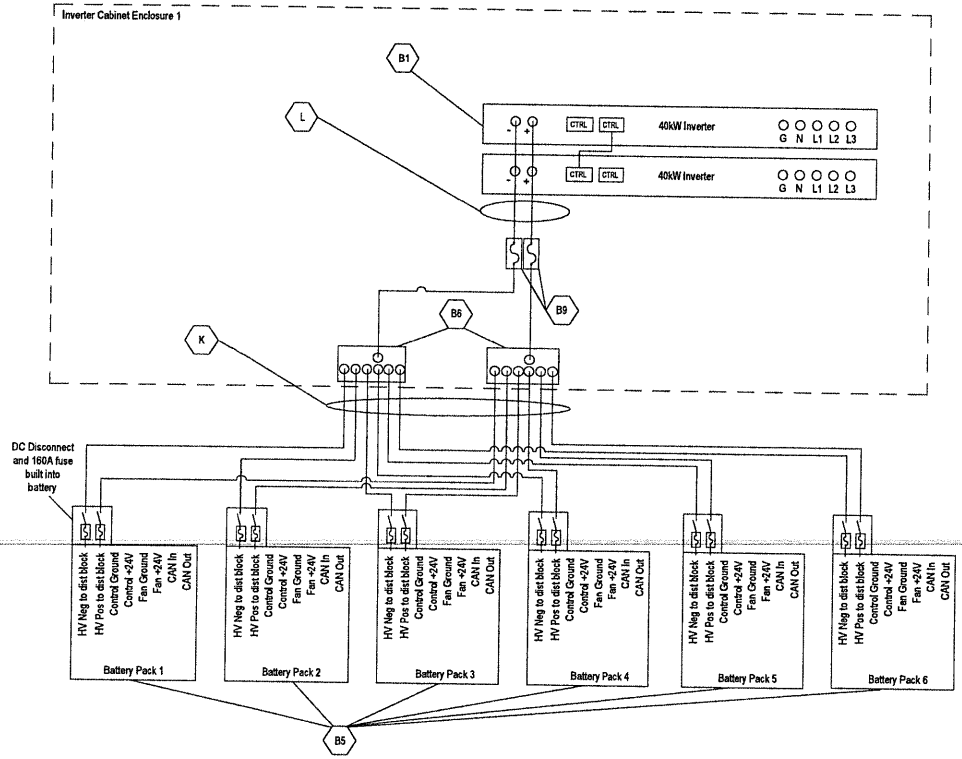

UNCLASSIFIED

United States Department of State
OVERSEAS BUILDINGS OPERATIONS
Washington, D.C.

ENERGY CONSERVATION MEASURES AT U.S. EMBASSY KOLONIA FEDERATED STATES OF MICRONESIA

WARNING: This document is the property of the U.S. Government. Further reproduction and/or distribution is prohibited without the express written permission of: Office of Overseas Buildings Operations, U.S. Department of State, Washington, DC, 20520. Information on this document is not to be altered except with the written approval of the individual whose seal appears hereon.

Rev #	Description	Date

RME Electric Corporation
19160 Smith Road
Aurora, CO 80011, USA

Hollingsworth Pack Corporation
201 Penniman Rd.
Williamsburg, VA 23185, USA

Global Solace Inc.
20530 Beallsville Rd.
Beallsville, MD 20839, USA
tel 000.000.0000

Kramus Engineering
Brian Barghart
M: (303) 908-8957
W: KramusEngineering.com

Release For Construction:
A/OBO/PE/PM | A/OBO/PE/BOE

Drawing Title: KOLONIA DC 3-LINE SYS 1

OBO Project Number: 19GE5019C0028	Drawing Scale: NTS	Phase: ☐ 35%(CD1) ☐ 100%(CD3) ☐ 60%(CD1) ☒ 100%(CD2) ☐ 90%(CD2) ☐ IFC
CAD File Name: FSM-GEN-PV-CO2.dwg	CAD Plot Scale: 1:1	
	Date: 2/21/2022	Sheet Number: SPX BESS-005
	Drawn By: JLE	
	Checked By: LBS	
	A/E Project Number: 20-1089	

UNCLASSIFIED

20

References					
B1	Battery Inverter	B6	PD Block	B9	DC System Fusing
B5	Battery Cabinet	B7	Power Supply		

UNCLASSIFIED

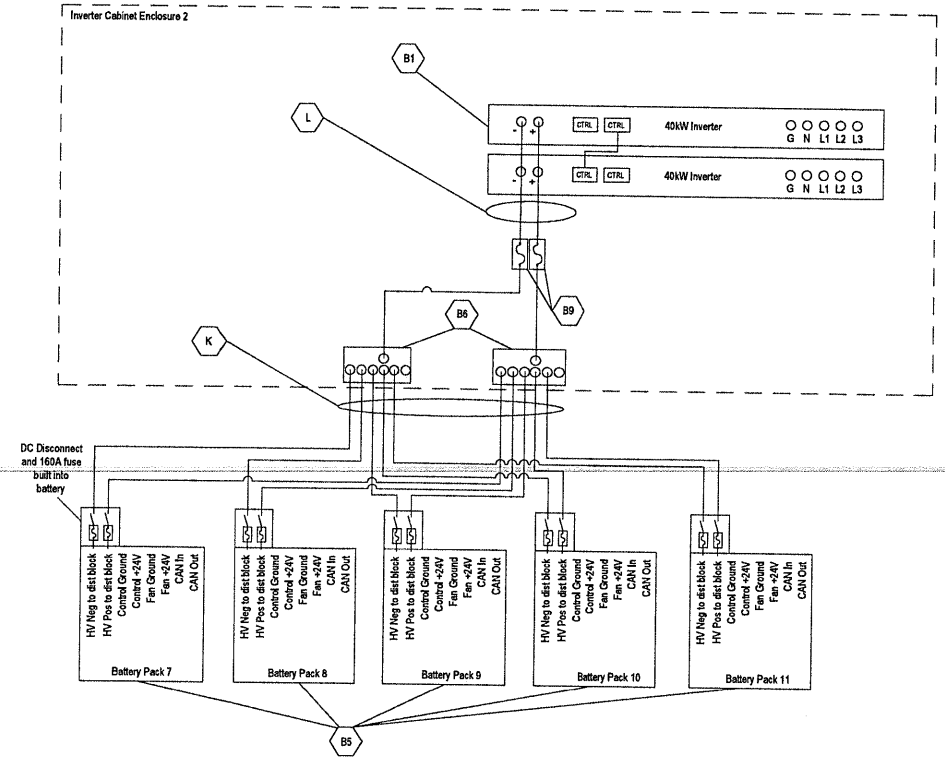

UNCLASSIFIED

United States Department of State
OVERSEAS BUILDINGS OPERATIONS
Washington, D.C.

ENERGY CONSERVATION MEASURES AT U.S. EMBASSY KOLONIA FEDERATED STATES OF MICRONESIA

WARNING: This document is the property of the U.S. Government. Further reproduction and/or distribution is prohibited without the express written permission of: Office of Overseas Buildings Operations, U.S. Department of State, Washington, DC, 20520. Information on this document is not to be altered except with the written approval of the individual whose seal appears hereon.

Rev #	Description	Date

RME Electric Corporation
19160 Smith Road
Aurora, CO 80011, USA

Hollingsworth-Pack Corporation
201 Panman Rd.
Williamsburg, VA 23185, USA

Global Solace Inc.
20530 Beallsville Rd.
Beallsville,MD 20839, USA
tel 000.000.0000

Krenus Engineering
Brian Borghart
M: (303) 908-8957
W: KrenusEngineering.com

Release For Construction

AIOBO/PE/PM	AIOBO/PE/EDE

Drawing Title: KOLONIA DC 3-LINE SYS 2

OBO Project Number	Drawing Scale	Phase
19GE5019C0028	NTS	☐ 35%(CD1) ☐ 100%(CD3)
CAD File Name	CAD Plot Scale	☐ 60%(CD1) ☒ 100%(CD2)
FSM-GEN-PV-CO2.dwg	1:1	☐ 90%(CD2) ☐ IFC

Date	Sheet Number
2021/04/02	SPX BESS-006
Drawn by: J.E.	
Checked by: LBS	
A/E Project Number: 20-1089	

UNCLASSIFIED

21

References			
B1	Battery Inverter	B5	Battery Cabinet
B2	AC Combiner	B7	Power Supply
B3	Transformer	B8	HVAC Unit

UNCLASSIFIED

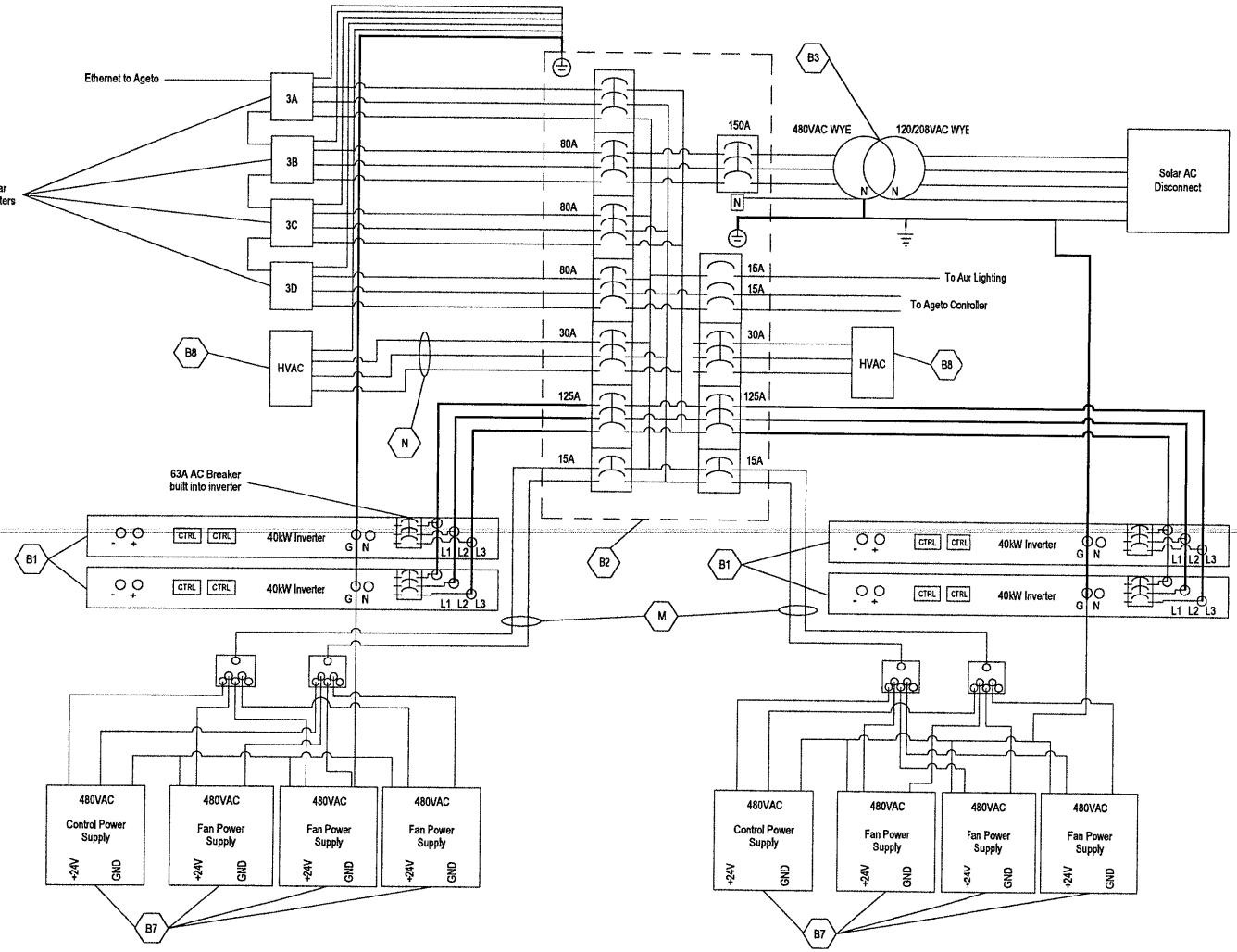

UNCLASSIFIED

United States Department of State
OVERSEAS BUILDINGS OPERATIONS
Washington, D.C.

ENERGY CONSERVATION MEASURES AT U.S. EMBASSY KOLONIA FEDERATED STATES OF MICRONESIA

WARNING: This document is the property of the U.S. Government. Further reproduction and/or distribution is prohibited without the express written permission of Office of Overseas Buildings Operations, U.S. Department of State, Washington, DC, 20520. Information on this document is not to be altered except with the written approval of the individual whose seal appears hereon.

Rev #	Description	Date

RME Electric Corporation
19198 Smith Road
Aurora, CO 80011, USA

Hollingsworth-Pack Corporation
201 Penniman Rd.
Williamsburg, VA 23185, USA

Global Solace Inc.
20539 Beallsville Rd.
Beallsville, MD 20839, USA
tel 000.000.0000

Kronus Engineering
Brian Banghart
M. (303) 908-8957
W. KronusEngineering.com

Release For Construction:
A/OBO/PE/PM | A/OBO/PE/BDE

Drawing Title: **KOLONIA-AC 3-LINE**

OBO Project Number: 19GE5018C0028
Drawing Scale: NTS
Phase: ☐ 35%(CD1) ☐ 100%(CD3) ☐ 60%(CD1) ☐ 100%(CD2) ☐ 90%(CD2) ☐ IFC
CAD File Name: SPX-BESS-00.dwg
CAD Plot Scale: 1:1
Date: 2021/04/02
Drawn By: J.E
Checked By: LBP
A/E Project Number: 20-1089
Sheet Number: **SPX BESS-007**

UNCLASSIFIED

22

UNCLASSIFIED

REFERENCES:

— + — + — POSITIVE HOME RUN WIRES

———— NEGATIVE HOME RUN WIRES

---------- MODULE STRINGS

3.4. SMA TRIPOWER CORE1 50-US INVERTER

NOTES:

1. HOME RUN WIRES RUN UNDER MODULES, ATTACHED TO RAILS IN 1/2" LIQUID TITE CONDUIT TO INVERTER.
2. BOND EACH ARRAY EQUIPMENT GROUND TO FRAME OF STRUCTURE.
3. UNDERGROUND CONDUIT FROM INVERTER TO BESS. C CONDUIT FROM INVERTER TO AC COMBINER AT BESS,
4. DATA CONDUIT G FROM INVERTER TO BESS IN SAME TRENCH AS POWER CONDUIT C.
5. SEE GEN-PV6-001 FOR COMPLETE KEY REFERENCES LIST, INCLUDING WIRE AND CONDUIT SIZES

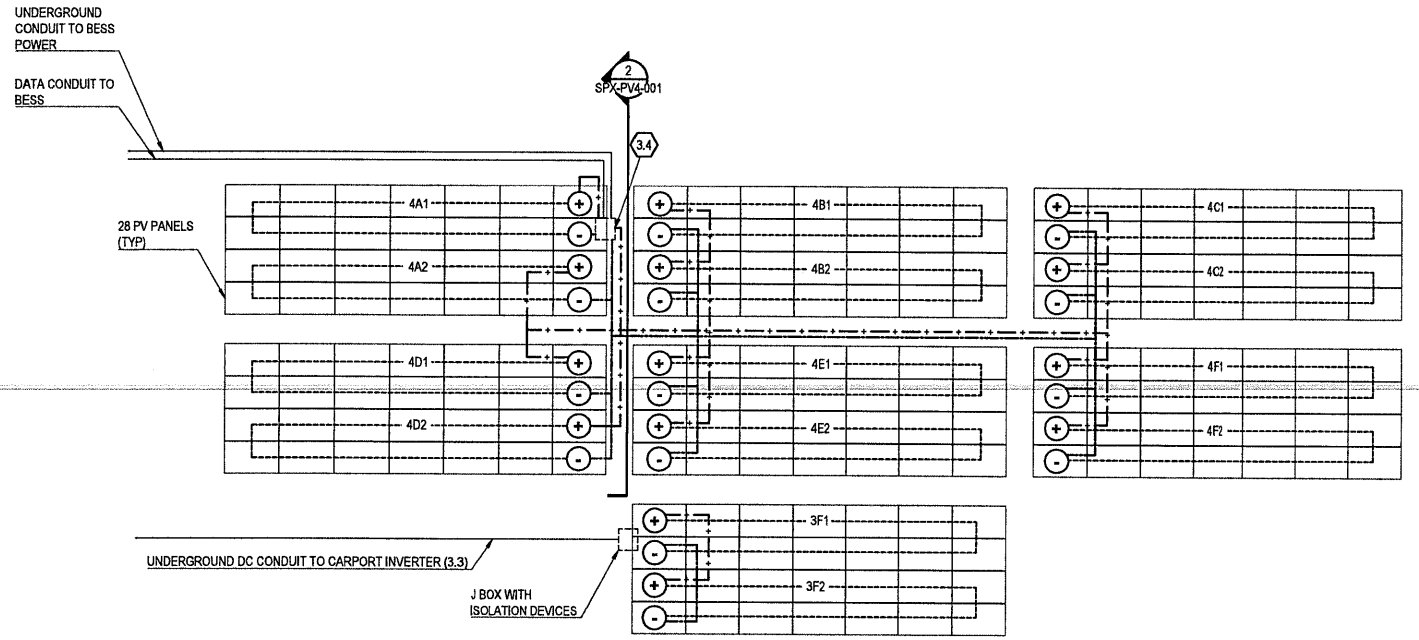

ROOF PLAN | 1:75 | 1 / K18A1

UNCLASSIFIED

United States Department of State
OVERSEAS BUILDINGS OPERATIONS
Washington, D.C.

ENERGY CONSERVATION MEASURES AT U.S. EMBASSY KOLONIA FEDERATED STATES OF MICRONESIA

WARNING: This document is the property of the U.S. Government. Further reproduction and/or distribution is prohibited without the express written permission of Office of Overseas Buildings Operations, U.S. Department of State, Washington, DC, 20520. Information on this document is not to be altered except with the written approval of the individual whose seal appears hereon.

1:75 — 0 1500 3000 6000 — 21.19°

Rev #	Description	Date

RME Electric Corporation
19160 Smith Road
Aurora, CO 80011, USA

Hollingsworth-Pack Corporation
201 Penniman Rd.
Williamsburg, VA 23185, USA

Global Solace
Global Solace Inc.
20530 Beadleville Rd.
Beadleville, MD 20639, USA
tel 000.000.0000

Release For Construction:
AOBO/PE/PM | AOBO/PE/BOE

Drawing Title
GROUND MOUNT PLAN
PHOTOVOLTAIC SYSTEM

OBO Project Number 19GE5019C0028	Drawing Scale 1:75	Phase ☐ 35%(CD1) ☐ 100%(CD3)
CAD File Name FSM-SPX-PV-CO2.dwg	CAD Plot Scale 1:1	☐ 60%(CD1) ☒ 100%(CD2) ☐ 80%(CD2) ☐ IFC
Date 2021/04/02	Drawn By AJE	Checked By LBR
A/E Project Number 20-1088	Sheet Number SPX PV1-001	

UNCLASSIFIED

23

UNCLASSIFIED

REFERENCES:	NOTES:
3D - SMA TRIPOWER CORE1 50-US INVERTER	1. SEE GEN-PV6-001 FOR COMPLETE KEY REFERENCES LIST, INCLUDING WIRE AND CONDUIT SIZES

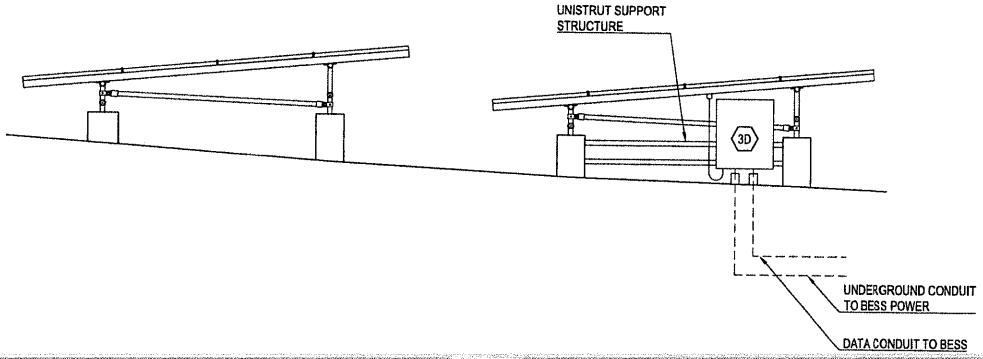

ELEVATION 1:25 1 / K18F1

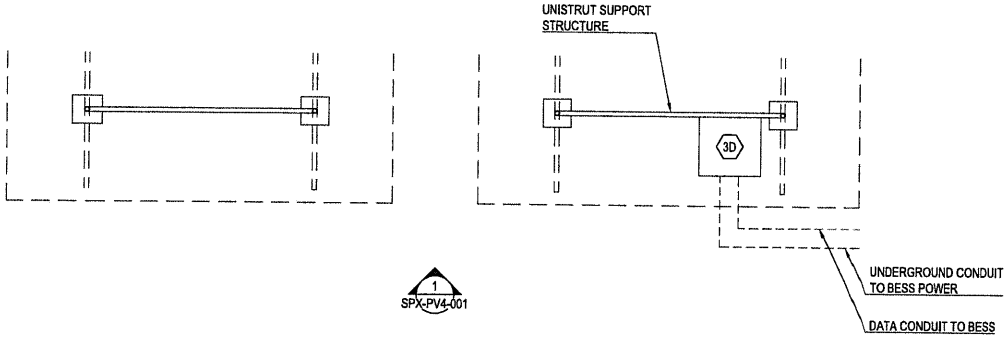

1 SPX-PV4-001

PLAN 1:25 2 / E18A1

UNCLASSIFIED

United States Department of State
OVERSEAS BUILDINGS OPERATIONS
Washington, D.C.

ENERGY CONSERVATION MEASURES AT U.S. EMBASSY KOLONIA FEDERATED STATES OF MICRONESIA

WARNING: This document is the property of the U.S. Government. Further reproduction and/or distribution is prohibited without the express written permission of Office of Overseas Buildings Operations, U.S. Department of State, Washington, DC, 20520. Information on this document is not to be altered except with the written approval of the individual whose seal appears hereon.

1:25 0 500 1000 2000 21.19"

Rev #	Description	Date

RME Electric Corporation
19160 Smith Road
Aurora, CO 80011, USA

Hollingsworth-Pack Corporation
201 Penniman Rd.
Williamsburg, VA 23185, USA

Global Solace Inc.
20530 Beallsville Rd.
Beallsville, MD 20839, USA
tel 000.000.0000

Release For Construction:
A/OBO/PE/PM | A/OBO/PE/SOE

Drawing Title: **GROUND MOUNT EQUIPMENT AREAS ENLARGEMENT PHOTOVOLTAIC SYSTEM**

OBO Project Number 19GE9019C0028	Drawing Scale 1:25	Phase ☐35%(CD1) ☐100%(CD3) ☐60%(CD1) ☒100%(CD2) ☐90%(CD2) ☐IFC
CAD File Name FSM-SPX-PV-CD2.dwg	CAD Plot Scale 1:1	
	Date 2021/01/28	Sheet Number SPX PV4-001
	Drawn By JLE	
	Checked By LBR	
	A/E Project Number 23-1089	

UNCLASSIFIED

24

UNCLASSIFIED

REFERENCES:	NOTES:
—+—+— POSITIVE HOME RUN WIRES ———— NEGATIVE HOME RUN WIRES ———— MODULE STRINGS	1. HOME RUN WIRES RUN UNDER MODULE ATTACHED TO RAILS IN LIQUID TITE CONDUIT, WHERE EXPOSED. 2. BOND EACH ARRAY EQUIPMENT GROUND TO FRAME OF STRUCTURE. 3. UNDERGROUND CONDUIT CONNECT AT BUILDING CORNER.

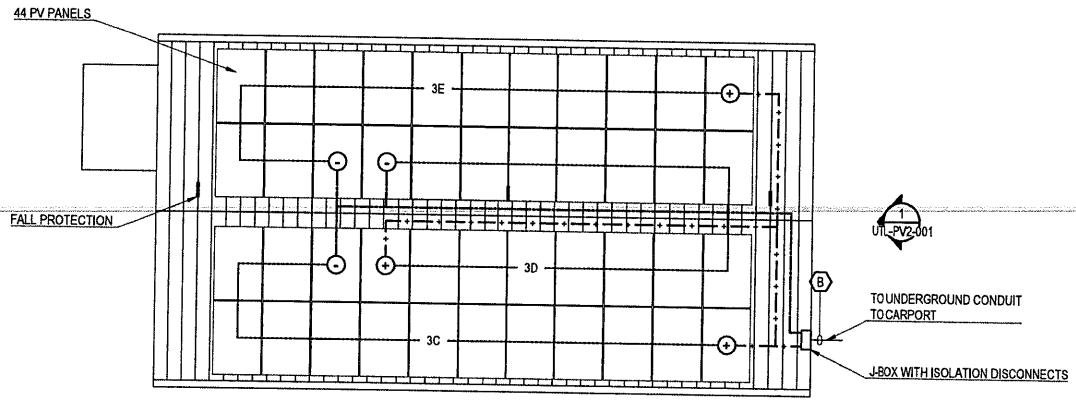

ROOF PLAN | 1:50 | 1 / K18A1

UNCLASSIFIED

United States Department of State
OVERSEAS BUILDINGS OPERATIONS
Washington, D.C.

ENERGY CONSERVATION MEASURES AT U.S. EMBASSY KOLONIA FEDERATED STATES OF MICRONESIA

WARNING: This document is the property of the U.S. Government. Further reproduction and/or distribution is prohibited without the express written permission of Office of Overseas Buildings Operations, U.S. Department of State, Washington, DC, 20520. Information on this document is not to be altered except with the written approval of the individual whose seal appears hereon.

1:50
0 1000 2000 4000
22.17°

Rev #	Description	Date

RME Electric Corporation
19160 Smith Road
Aurora, CO 80011, USA

Hollingsworth-Pack Corporation
201 Penniman Rd.
Williamsburg, VA 23185, USA

Global Solace Inc.
20530 Seabiscuit Rd.
Seabiscuit, MD 20639, USA
tel 000.000.0000

Release For Construction:
AOBO/PE/PM | AOBO/PE/EDE

Drawing Title
ROOF PLAN
PHOTOVOLTAIC SYSTEM

OBO Project Number: 19GE5019C0029	Drawing Scale: 1:50	Phase: ☐ 35%(CD1) ☐ 100%(CD3)
CAD File Name: FSM-UTL-PV-CO2.dwg	CAD Plot Scale: 1:1	☐ 60%(CD1) ☐ 100%(CD2) ☐ 90%(CD2) ☐ IFC
	Date: 2021/04/02	Sheet Number: UTL PV1-001
	Drawn By: JLE	
	Checked By: LBR	
	A/E Project Number: 20-1089	

UNCLASSIFIED

25

UNCLASSIFIED

REFERENCES:	NOTES:
	1. HOME RUN WIRES RUN UNDER MODULE ATTACHED TO RAILS, TO CONDUIT GOING DOWN BUILDING TO UNDERGROUND CONDUIT. 2. BOND EACH ARRAY EQUIPMENT GROUND TO FRAME OF STRUCTURE. 3. UNDERGROUND CONDUIT CONNECT AT BUILDING CORNER

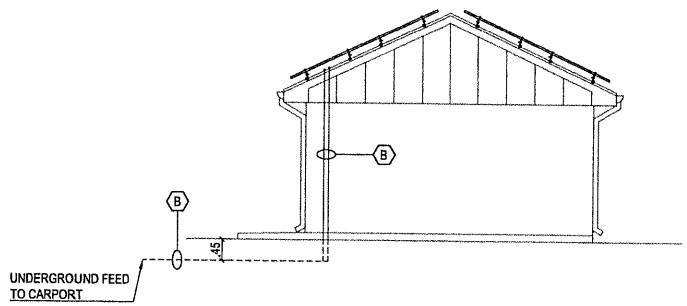

EAST ELEAVTION 1:50 1 K18F1

United States Department of State
OVERSEAS BUILDINGS OPERATIONS
Washington, D.C.

ENERGY CONSERVATION MEASURES AT U.S. EMBASSY KOLONIA FEDERATED STATES OF MICRONESIA

WARNING: This document is the property of the U.S. Government. Further reproduction and/or distribution is prohibited without the express written permission of: Office of Overseas Buildings Operations, U.S. Department of State, Washington, DC, 20520. Information on this document is not to be altered except with the written approval of the individual whose seal appears hereon.

1:50
0 1000 2000 4000

Rev #	Description	Date

RME Electric Corporation
19160 Smith Road
Aurora, CO 80011, USA

Hollingsworth-Pack Corporation
201 Penniman Rd.
Williamsburg, VA 23185, USA

Global Solace Inc.
20530 Beallsville Rd.
Beallsville, MD 20839, USA
tel 000.000.0000

Release For Construction:
A/OBO/PE/PM | A/OBO/PE/BDE

Drawing Title
ELEVATION
PHOTOVOLTAIC SYSTEM

OBO Project Number 19CE5019C0028	Drawing Scale 1:50	Phase ☐ 35%(CD1) ☐ 100%(CD3) ☐ 60%(CD1) ☒ 100%(CD2) ☐ 90%(CD2) ☐ IFC
CAD File Name FSM-UTL-PV-CD2.dwg	CAD Plot Scale 1:1	
	Date 2021/01/29	Sheet Number UTL PV2-001
	Drawn By JLE	
	Checked By LBR	
	A/E Project Number 20-1069	

UNCLASSIFIED

26

UNCLASSIFIED

REFERENCES:

4. AC COMBINER
5. TRANSFORMER
6. AC DISCONNECT
7. TRANSFER SWITCH (EXISTING)
8. MAIN DISCONNECT (EXISTING)
13. BREAKER PANEL BUILDING LOADS (EXISTING)
14. POWER ANALYZER

EQUIPMENT CLEARANCE AREA

EXITING EQUIPMENT TO REMAIN

NOTES:

1. EQUIPMENT CLEARANCE SHOWN AS DASHED LINES (0.91M)
2. NEC WORKING SPACE: 0.76M IN FRONT OF EQUIPMENT
3. CONDUIT DEPTH: 406MM
4. LINE SIDE TAP AT MAIN DISCONNECT ALLOWED AS PER NEC REQUIREMENTS
5. TWISTED PAIR WIRES BETWEEN MONITORING EQUIPMENT 14 & 15
6. SEE GEN-PV6-001 FOR COMPLETE KEY REFERENCES LIST, INCLUDING WIRE AND CONDUIT SIZES

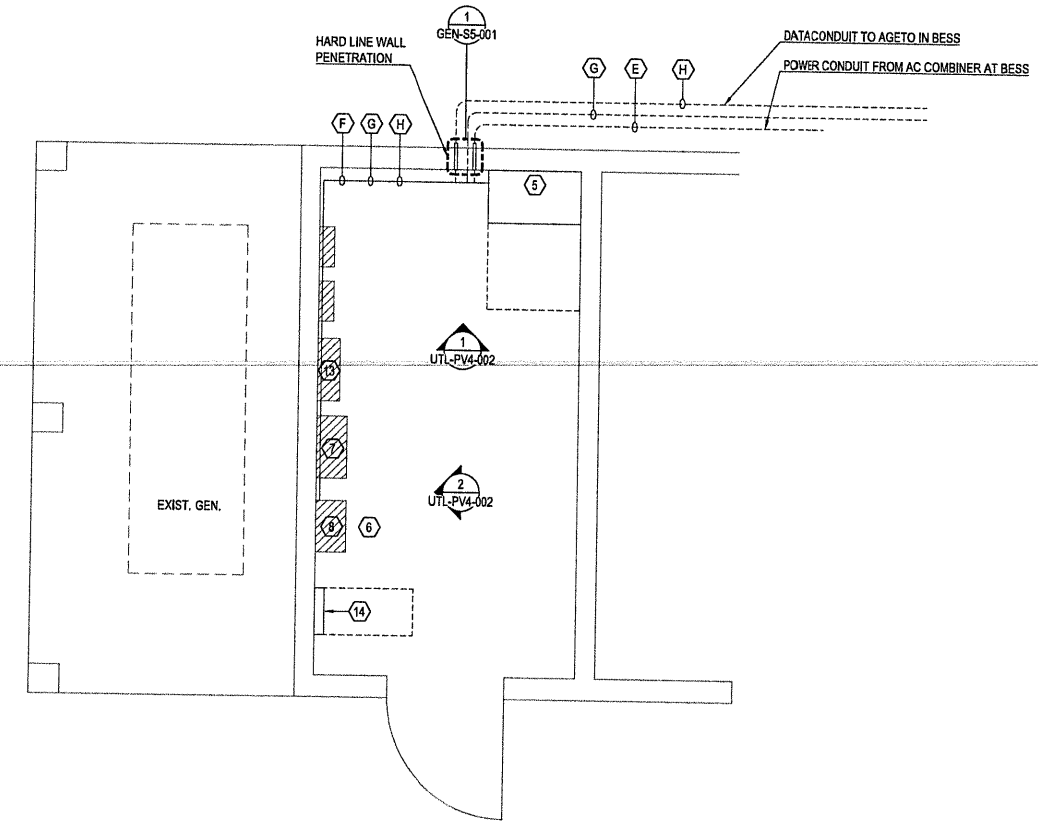

PLAN 1:25 | 1 / K18A1

UNCLASSIFIED

United States Department of State
OVERSEAS BUILDINGS OPERATIONS
Washington, D.C.

ENERGY CONSERVATION MEASURES AT U.S. EMBASSY KOLONIA FEDERATED STATES OF MICRONESIA

WARNING: This document is the property of the U.S. Government. Further reproduction and/or distribution is prohibited without the express written permission of: Office of Overseas Buildings Operations, U.S. Department of State, Washington, DC, 20520. Information on this document is not to be altered except with the written approval of the individual whose seal appears hereon.

1:25
0 500 1000 2000
22.17°

Rev #	Description	Date

RME Electric Corporation
19169 Smith Road
Aurora, CO 80011, USA

Hollingsworth-Pack Corporation
201 Penniman Rd.
Williamsburg, VA 23185, USA

Global Solace Inc.
20530 Beallsville Rd.
Beallsville, MD 20839, USA
tel 000.000.0000

Release For Construction:
A/OBO/PE/PM | A/OBO/PE/BDE

Drawing Title
ELECTRICAL ROOM PLAN ENLARGEMENT PHOTOVOLTAIC SYSTEM

OBO Project Number: 19GE5019C0028	Drawing Scale: 1:25	Phase: ☐ 30%(CD1) ☐ 100%(CD3) ☐ 60%(CD1) ☒ 100%(CD2) ☐ 90%(CD2) ☐ IFC
CAD File Name: FSM-UTL-PV-CD2.dwg	CAD Plot Scale: 1:1	
	Date: 2021/01/28	Sheet Number: UTL PV4-001
	Drawn By: J.E	
	Checked By: LBR	
	A/E Project Number: 20-1589	

UNCLASSIFIED

27