ITEM NO: 1 & 3

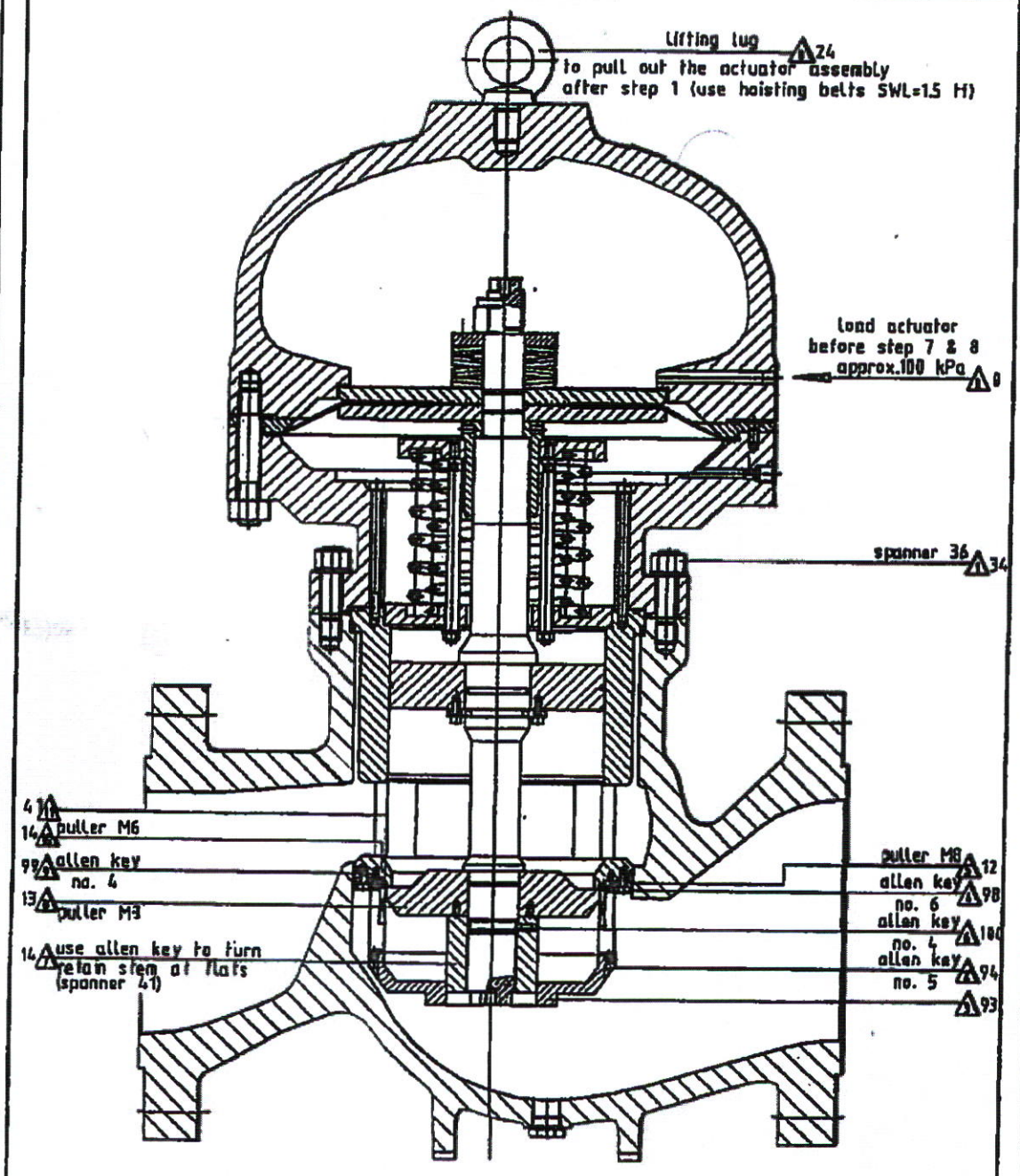

GORTER CONTROLS

Disassembly Sequence R100S-12x10"

Gas Pressure Regulators Series R100

ITEM Nº : 2

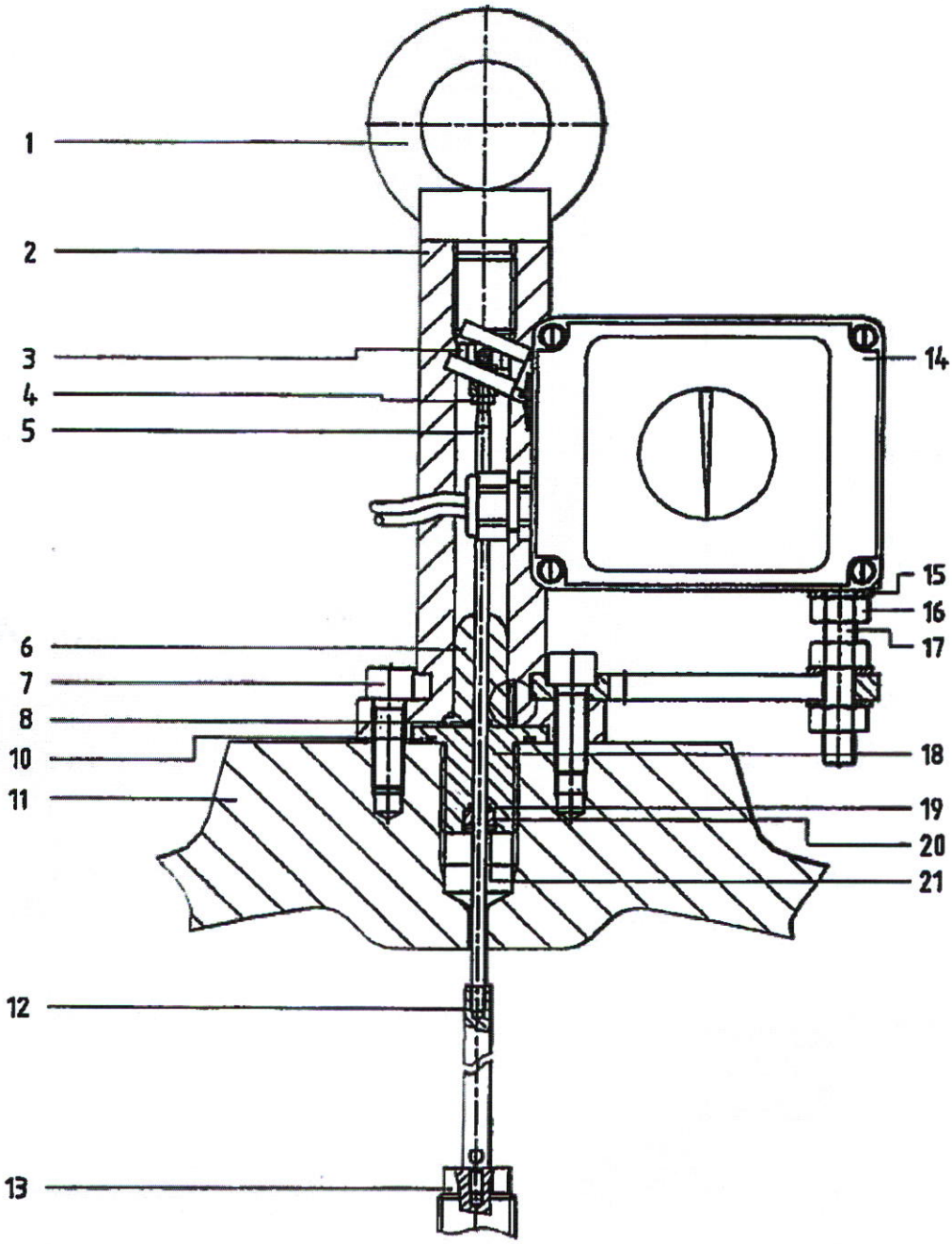

GORTER CONTROLS

#1 POSITION TRANSMITTER F30 PT2

Gas Presure Regulators Series R100

This indicator may be applied in those cases where measuring the pressure between the monitor regulator and active regulator is expected to be insufficiently reliable. This may be when gas velocities in the pipe-piece become so high that flow-induced pulsations may occur.

7.1.2 Working

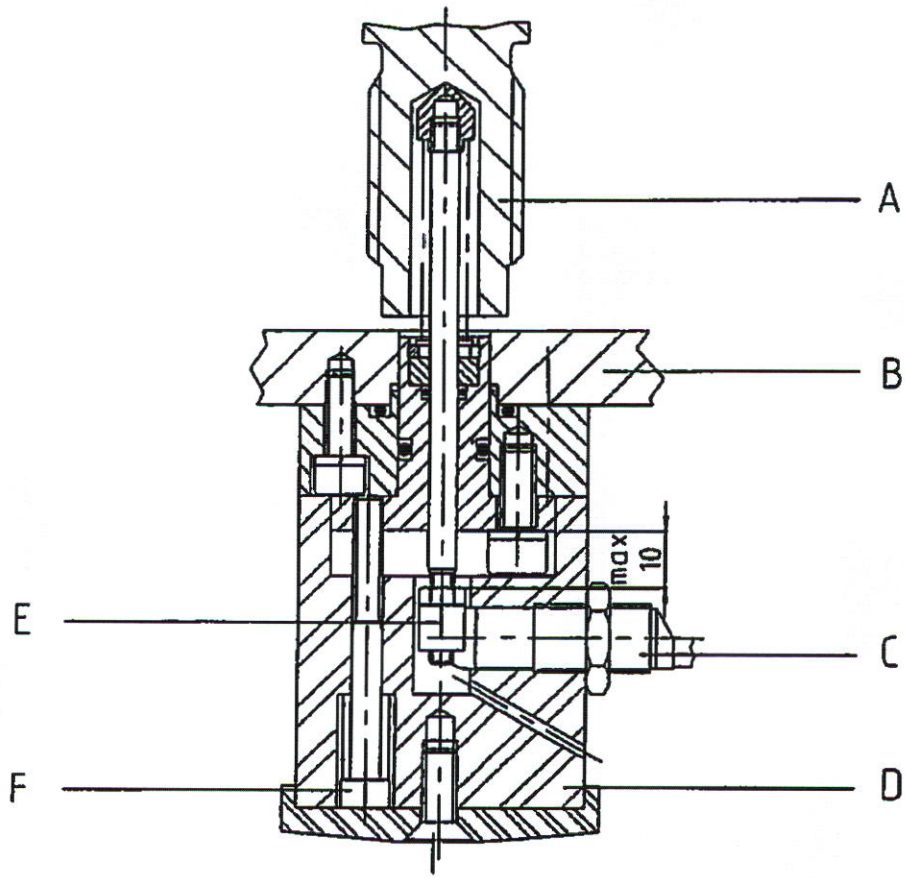

Figure 9: Working open position indicator monitor regulator

The open position indicator is mounted to the bottom cover of the monitor regulator as per figure 9. If the valve of the monitor regulator is fully opened, block E will be in front of proximity switch C and the proximity switch will give a signal. If the monitor regulator takes over, the monitor valve will move upwards, as well as detector E. The proximity switch will give an intermittent signal from which it may be concluded that the monitor regulator is active.

7.1.3 Adjusting and checking

For adjusting, the monitor valve has to be in its lowest position. This can easily be realised by filling the bell of the monitor regulator (connection 6, figure 7) with pressure.

Caution: this pressure should not be higher than 1 bar!
In addition, the whole system has to be unpressurised.

ITEM NO: 4

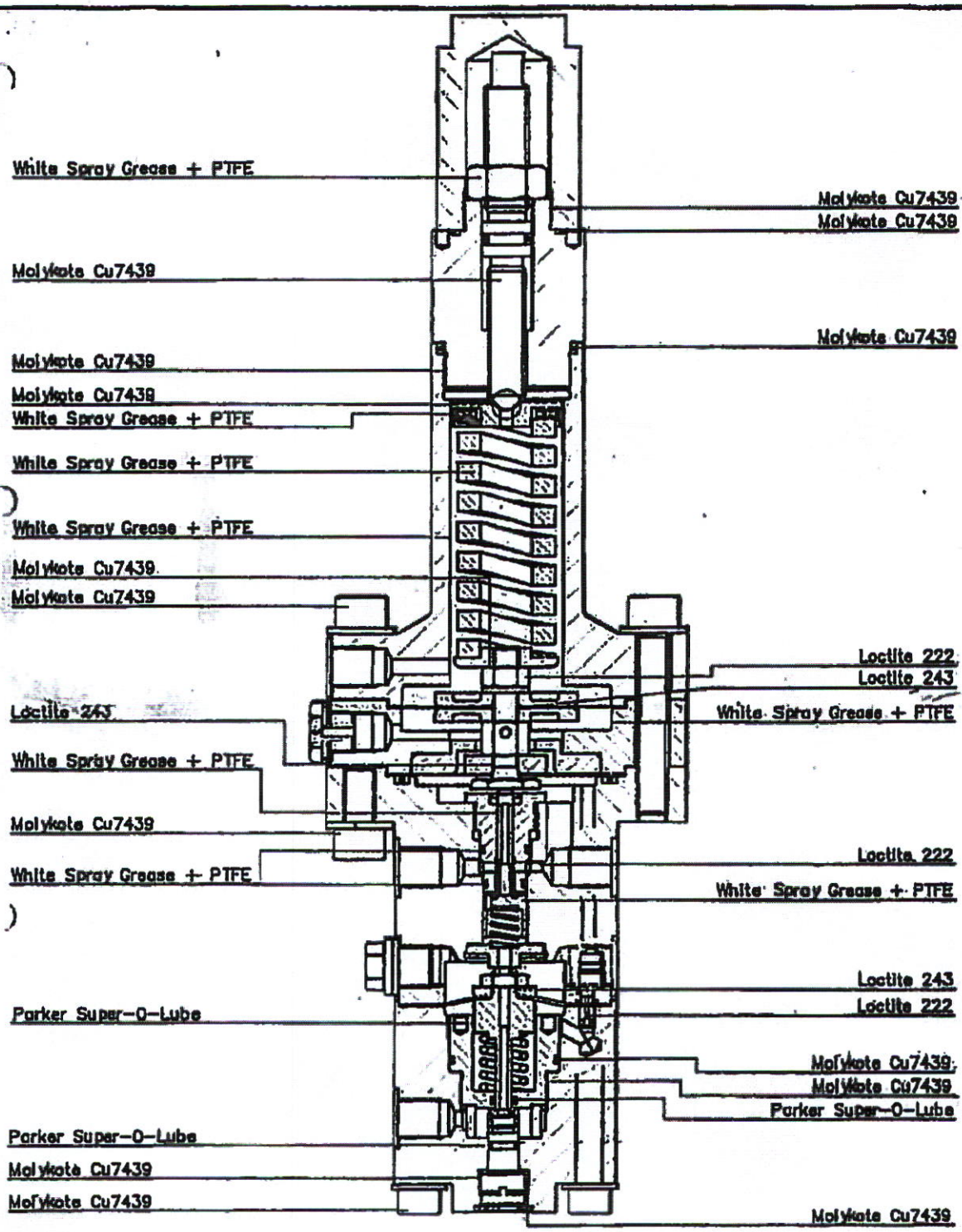

GORTER CONTROLS

LUBRICANTS & SEALANTS P095

Gas Pressure Regulator Series R100S

GORTER CONTROLS SCHOONHOVEN THE NETHERLANDS

ITEM NO: 5

RELIEF VALVE AV095-HP/MP

OPERATING/MAINTENANCE MANUAL

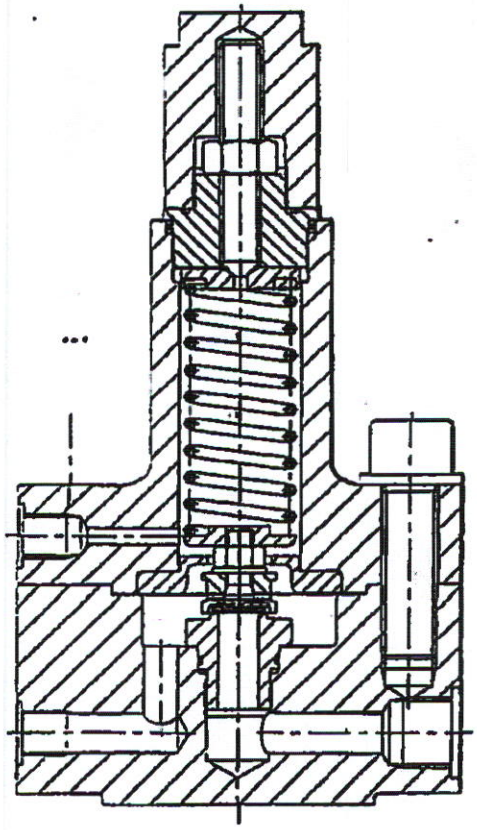

ITEM NO: 5

1 Introduction

1.1 Technical data

Technical data relief valve type AV095:

Medium	:	all gases with the exception of sulphurous gases (H_2S). *Relief valves suitable for sulphurous gases can be supplied on request.*
Temperature	:	-20°C to +80°C
System pressure (p_1)	:	maximum 100 bar
Maximum outlet pressure	:	depends on spring type
Weight	:	approx. 10 kg
Height	:	235 mm
Largest diameter	:	ø 130 mm
Spring type	:	see section 4.1
Pipe connections	:	¼" BSP (2x; inlet and breathing) ½" BSP (outlet)
Position type plate	:	side of relief valve
Data on type plate	:	name of manufacturer, type indication, spring type, serial number number, setting values, year of construction and maximum inlet pressure allowed

ITEM NO: 5

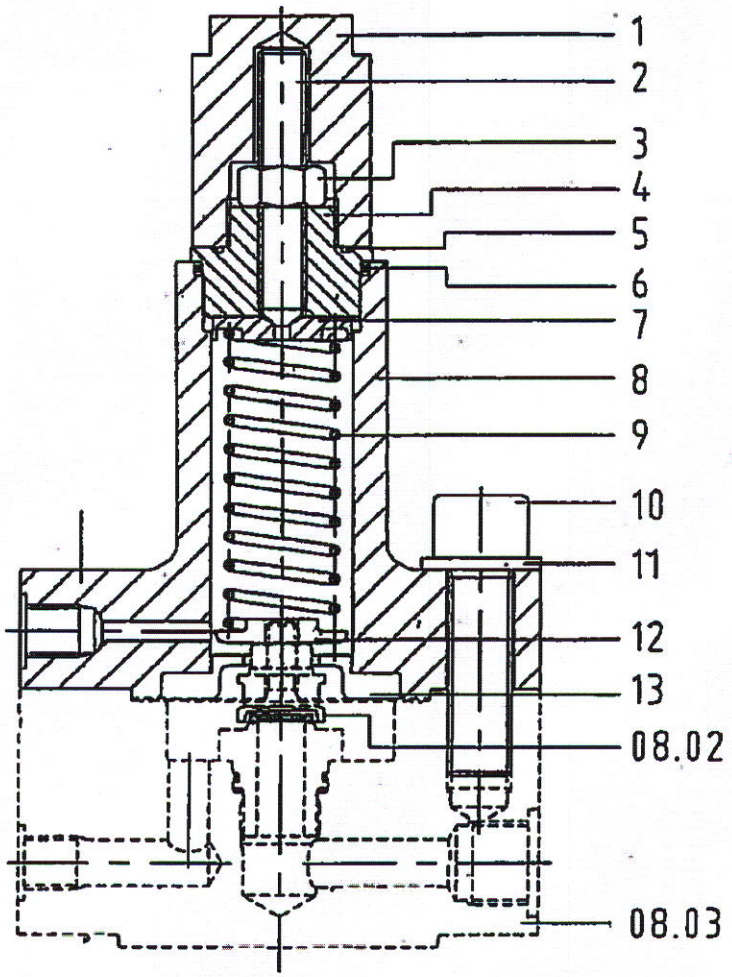

drawing: 08.04

ITEM NO: 6

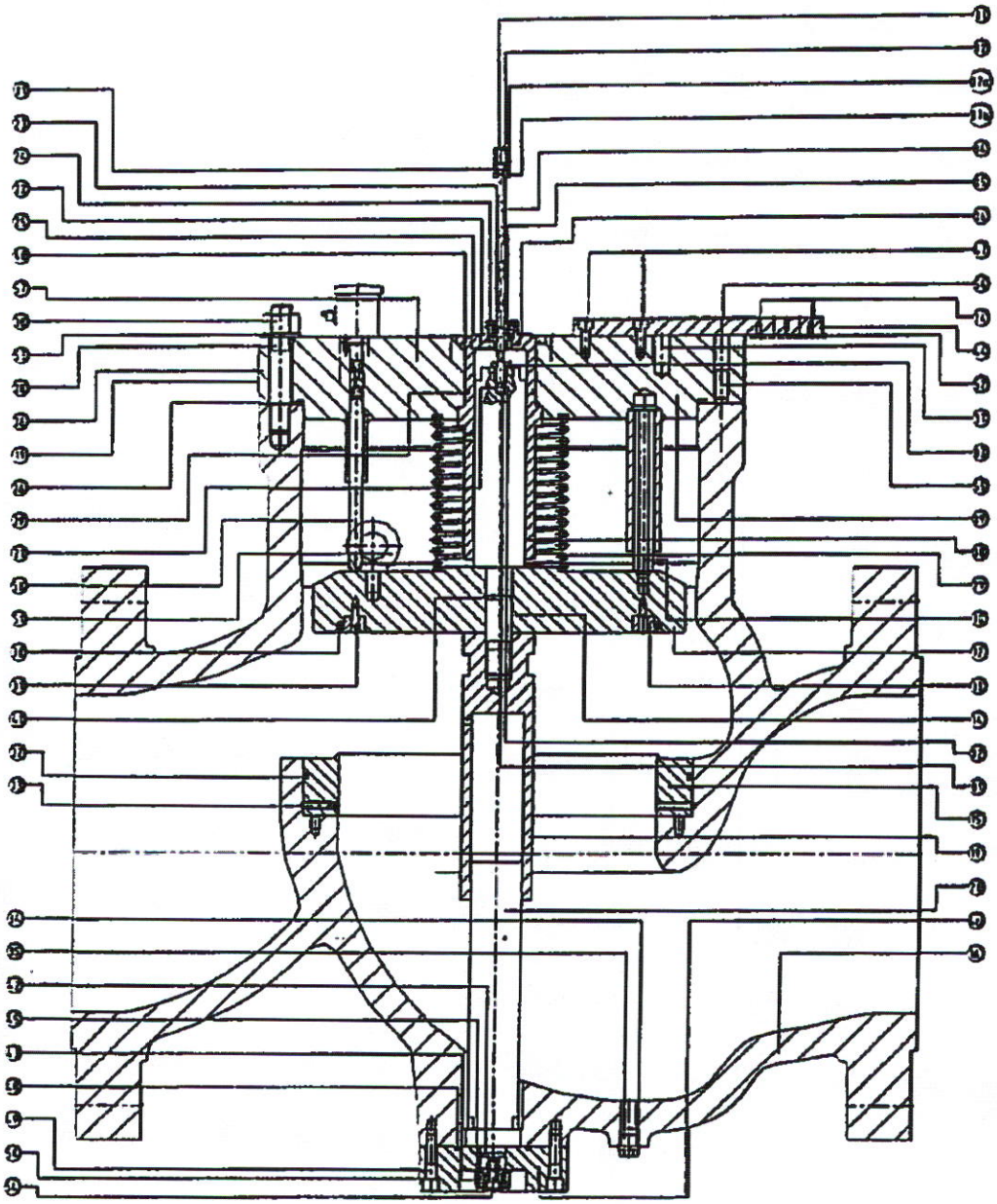

Figure 7b: valve and valve body

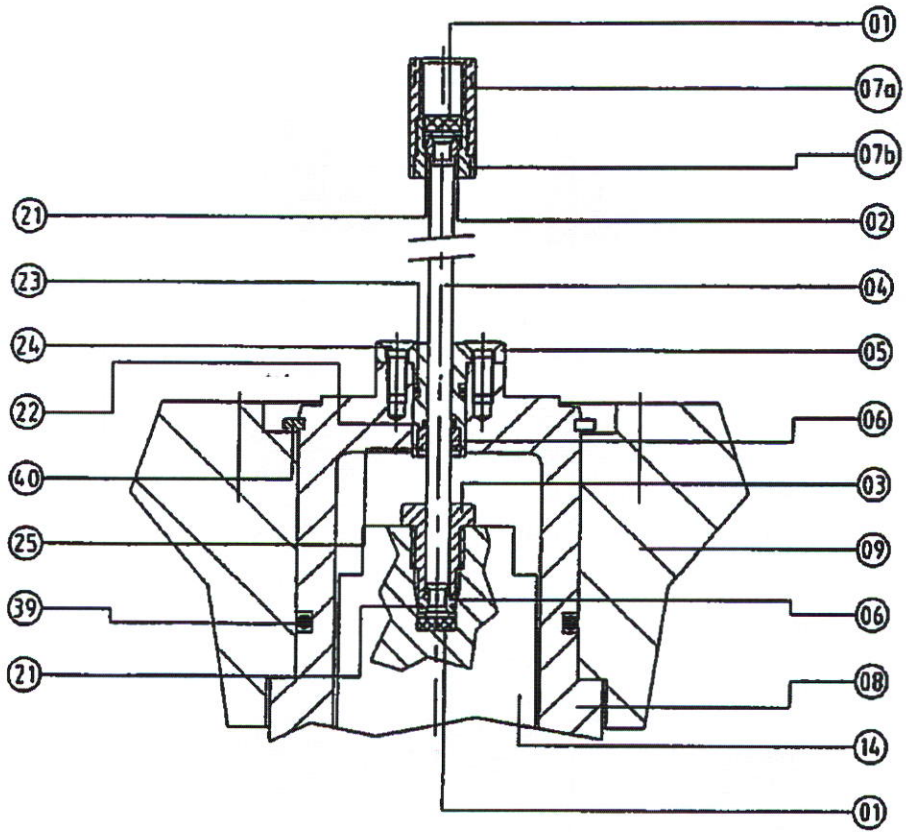

Figure 7c: Detail of connection rod and connection rod guide

Remark
Check the set pressures of the safety device after each maintenance !

ITEM NO: 7

5.1.3 Pressure converter SM 1.x-A

(see figure 6)

The following parts have to be replaced in this component.
- Diaphragm 02
- O-ring 16
- O-ring 18

To replace these parts, the following steps are to be taken.
- Disconnect impulse line 21
- Unscrew screw connection 15
- Remove cover 01
- Remove diaphragm 02
- Remove bottom seat 05 to replace O-ring 18
- Replace O-ring 18
- Replace O-ring 16
- Fit bottom seat 05, new diaphragm 02 and cover 01 with O-ring 16
- Tighten screw connection 15 (even and diagonally)
- Connect impulse line.

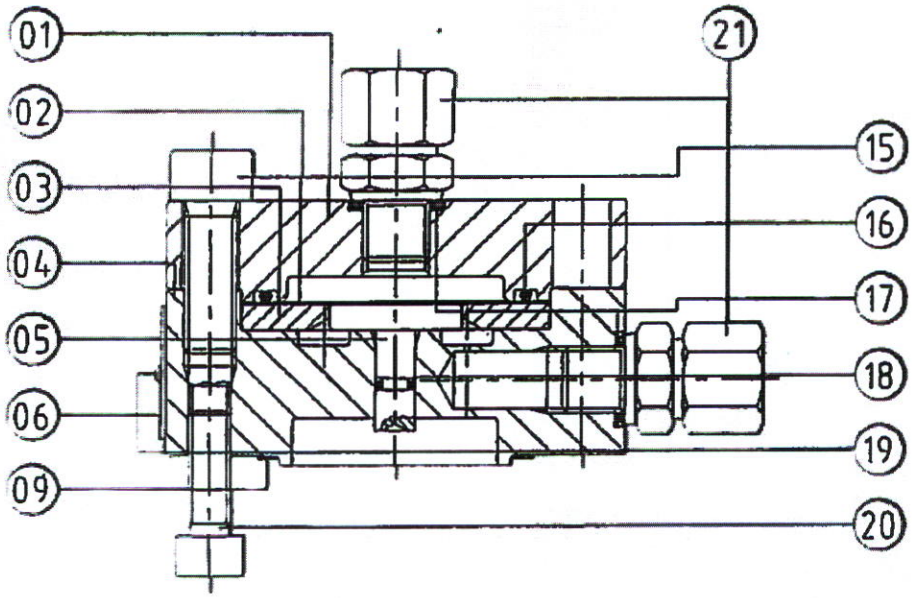

Figure 6: Pressure converter SM1.x-A

5.1.5 Valve and body HSVS

(see figures 7a and 7b)

The following parts should be replaced in this component during maintenance:

- 2x O-ring retainer set 21 (no seal, must be replaced during fitting, however)
- O-ring rod 22
- O-ring guide 23
- 4x socket screw 24
- O-ring cover 26
- O-ring valve 30
- 12x socket screw 31
- O-ring valve seat 32
- O-ring guide 39
- O-ring 40
- O-ring guide of valve stem guide 41
- O-ring guide of valve stem seat 42
- O-ring bottom cover 48
- Filler block 01 (no seal, must be replaced during fitting)

Work as follows to replace these parts:

- The valve should be closed.
- Disconnect impulse line of the pressure converter (pos. 21 in fig. 6).
- Remove protective cap 25 (see figure 7a).
- Unscrew screw connection 47 and dismount the complete SVC086.
- Unscrew screw connections 38, 40 (figure 7a) and dismount the complete second stage.
- Detach connection rod 04 (figure 7a) from top coupling section 07a.
- Unscrew screw couplings 38, 53, 28.
- Lift cover 09 from body 16 by load frame 37 provided for this purpose (not shown in figure 7a). To simplify detachment of the cover 09 from body 16 you may use lock screws 55 (having released plug 56).
- When you have used the lock screws 55, you should tighten them again and fit plug 56.
- Valve 12 is now underneath cover 09.
- Place cover 09 with valve 12 on a surface which guarantees that valve rod below 19 sticks through the surface and that valve 12 with cover 09 lies horizontally (when putting it down on the surface, cover 09 slides over the valve rod top 14).
- Loosen the connections between coupling top 07a and coupling bottom 07b and disconnect coupling top.
- Disconnect retainer set 02 from connection rod 04.
- Replace O-ring retainer set 21.
- Slowly lift cover 09 with guide of valve rod top 08 by the load frame 37 provided for this purpose (not shown in figure 7a) and lift over connection rod 04.
- Place cover 09 on a similar surface as the valve.
- Remove lock ring 40

Take care that the guide of valve rod top 08 should not fall out of cover 09 unchecked.

- Remove guide of valve rod top 08 from cover 09 and replace O-ring 39.
- Fit guide of valve rod top 08 in cover 09 and fit lock ring 40.

5.1.6 Spare-part sets

Pressure converter SM 1.x-A
(see figure 6 and partslist page 39)

This spare-part set consists of:
- 1x diaphragm 02
- 1x O-ring 16
- 1x O-ring 18
- 1x seal 34

Valve and valve body HSV086
(see figure 7a and partslist page 32)

This spare-part set consists of:
- 2x O-ring retainer set 21
- 1x O-ring rod 22
- 1x O-ring guide 23
- 1x O-ring top cover 26
- 1x O-ring valve 30
- 1x O-ring valve seat 32
- 1x O-ring 40

Valve and valve body HSVS086
(see figures 7b and 7c and partslist page 33)

This spare-part set consists of:
- 2x O-ring retainer set 21
- 1x O-ring rod 22
- 1x O-ring guide 23
- 1x O-ring top cover 26
- 1x O-ring valve 30
- 1x O-ring valve seat 32
- 1x O-ring guide 39
- 1x O-ring valve stem guide 41
- 1x O-ring valve stem seat 42
- 1x O-ring bottom cover 48
- 1x O-ring 40
- 2x filler block 01
- 4x countersunk screw 24
- 12x socket screw 31

Valve position indicator (accessory A8)
(see figure 9 and partslist page 46)

This spare-part set consists of:
- 1x O-ring guide 16
- 1x O-ring rod 17
- 1x flat-headed screw 10
- 2x socket screw 11
- 4x flat-headed screw 15

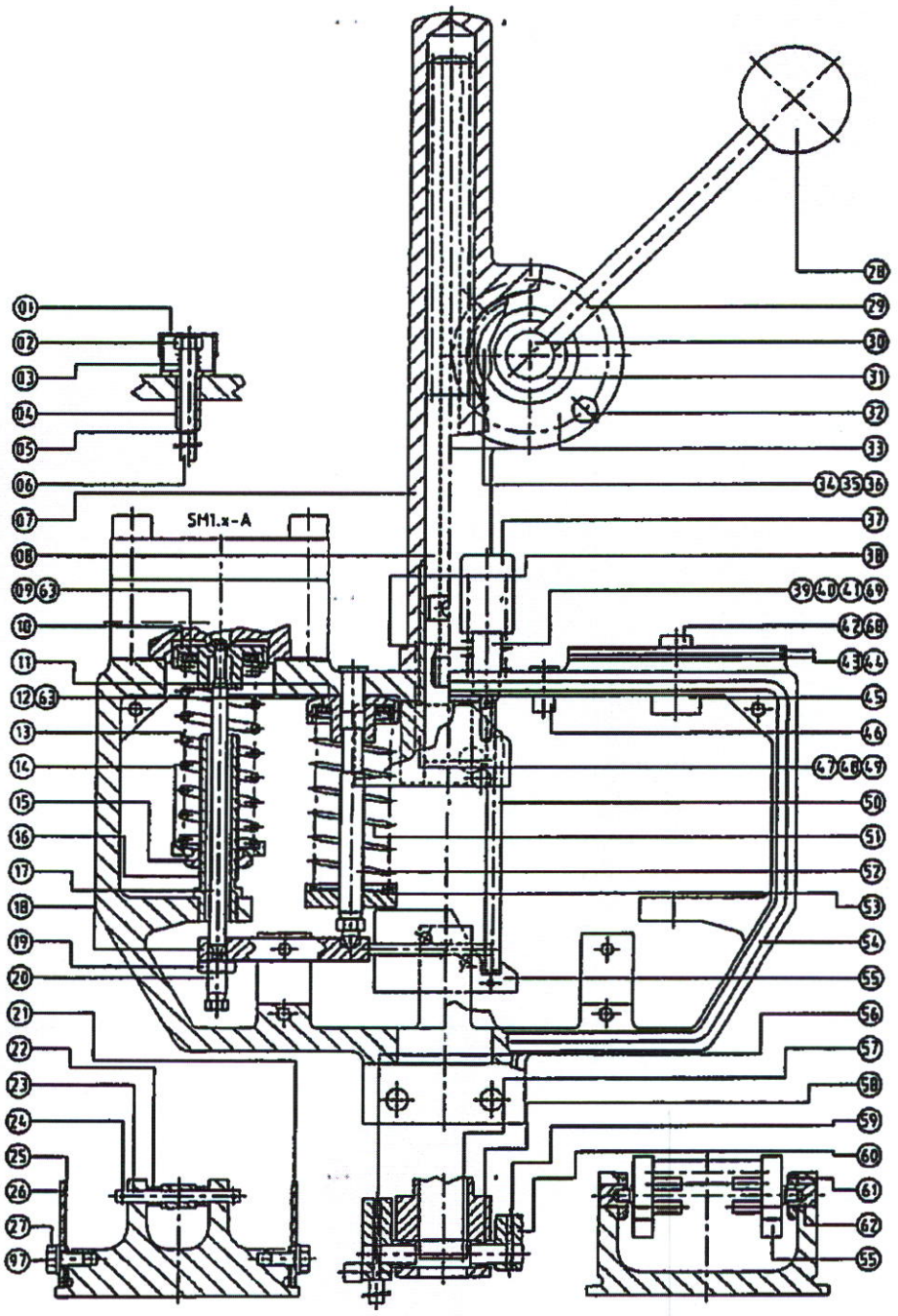

Figure 8: Control and switch mechanism SVC 086

ITEM NO: 8

2.2 The switch and reset mechanism

The switch and reset mechanism SVC086 is used standard on all Baai safety shut-off devices. When the stroke of the HSV is smaller than 110 mm, the SVC086 may be mounted directly onto the body.

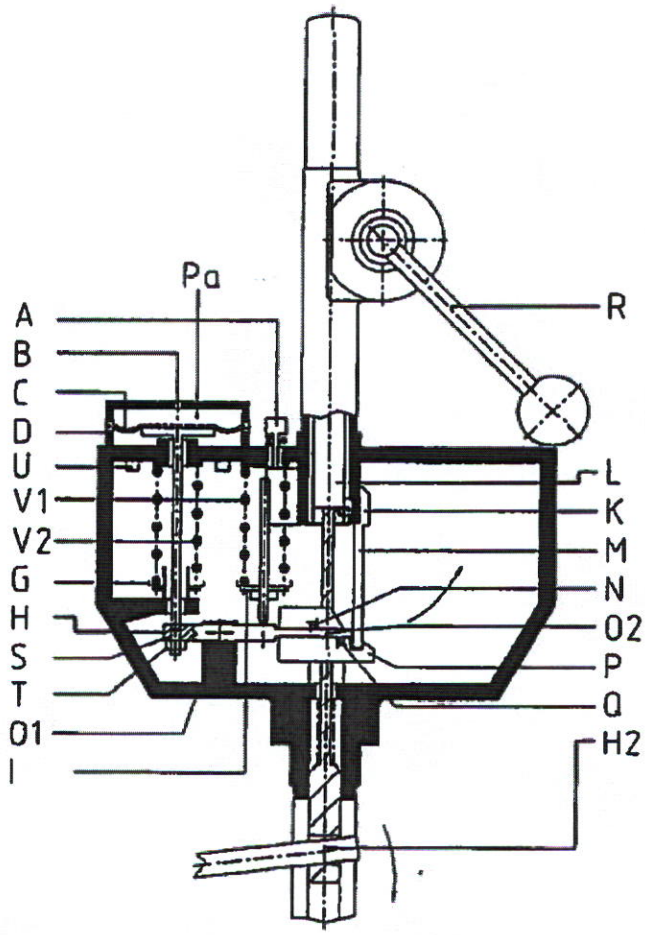

Figure 2: Working principle of the switch and reset mechanism SVC086

ITEM NU: 9

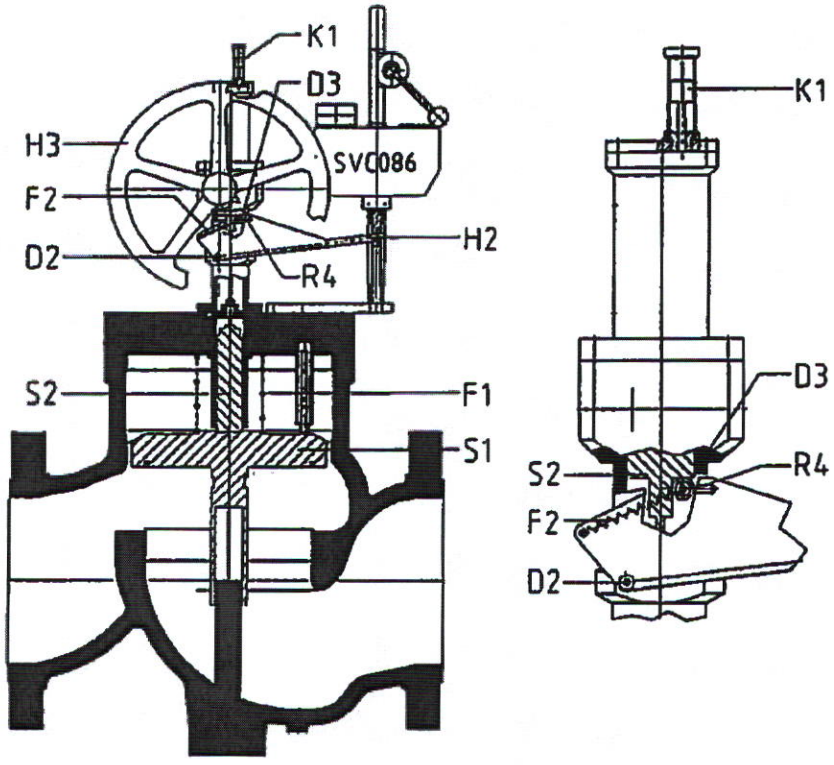

Figure 3: Working principle second stage HSVS

2.3 Releasing and opening HSV / HSVS

(see figures 2 and 3)

After having solved the failure, the pressure to be protected returns to a value between the lower and higher threshold value. Handle H returns to its initial position. Due to gravity, balance jaw P follows this movement.
In order to make the HSV ready-for-operation again, the switch and reset mechanism must first be reset and then the second stage (if 16" and larger).
Here follows a short description of the actions for releasing and opening the HSV.

- Solve the failure;
- Bring the pressure to be protected to a normal value between the higher and lower threshold values;
- Ensure that no gas is taken off at the outlet side and that the pressure above and below the valve is in equilibrium, using a bypass;
- First press and then turn clockwise handle arm R of the lifting component of the SVC086;

ITEM NO: 10

225D/403

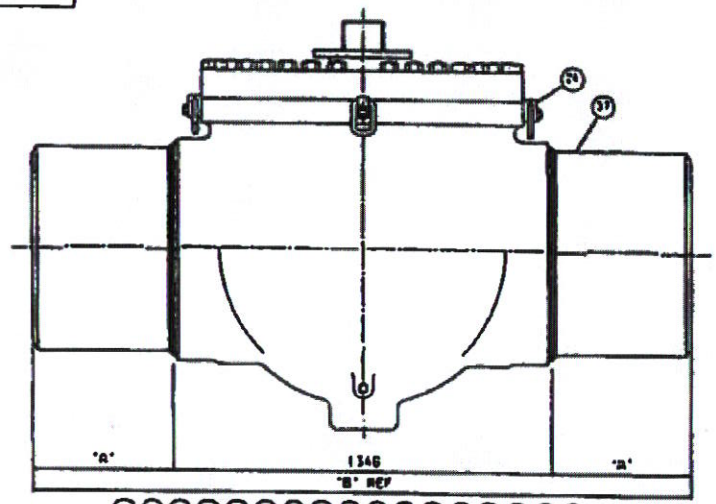

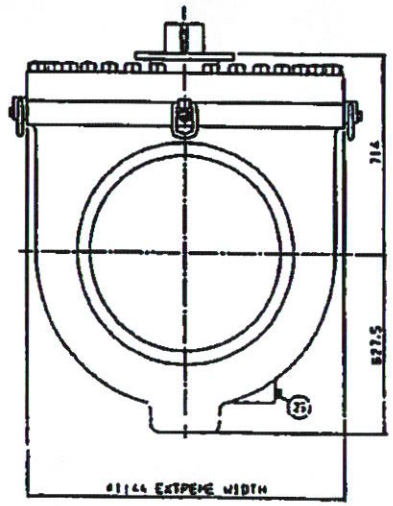

REF	NAME OF COMPONENT	MATERIAL	SPECIFICATION
1	BODY	CAST CARBON STEEL	ASTM A216 WCB
2	BONNET	HOT ROLLED PLATE	ASTM A516 GR 60
2a	REINFORCING PIECE	HOT ROLLED PLATE	ASTM A516 GR 60
5	BALL	LOW ALLOY STEEL	AISI 4140 + EP
6	STEM	LOW ALLOY STEEL	AISI 4140 + EP
7	TRUNNION	LOW ALLOY STEEL	AISI 4140 + EP
8	SEAT	LOW ALLOY STEEL	AISI 4140 + EP
8a	SEAT HOLDER	STEEL	.
9	SEAT FOLLOWER	LOW ALLOY STEEL	AISI 4140 + EP
10	SPRINGS	PHOSPHOR BRONZE	.
11	O-RING	VITON A	.
12	FIRE SEAL	GRAPHITE	.
16	GUIDES	PHOSPHOR BRONZE	.
18	KEY	MILD STEEL	ASTM-A36 GR
19	THRUST WASHER	PHOSPHOR BRONZE	BLAZER GR
20	STUDS	ALLOY STEEL	ASTM A193 GR B7 + EP
22	NUTS	ALLOY STEEL	ASTM A194 GR 2H + EP
32	CAP SCREWS	ALLOY STEEL	ASTM A193 GR B7 + EP
33	DOWELS	13CR PH STAINLESS	ASTM A564-630
34	LIFTING LUG	MILD	.
35	DRAIN PLUG	ALLOY STEEL	ASTM A182 F6a
36	BLEED VALVE	ALLOY STEEL	ASTM A182 F6a
37	CAP PINS	.	AISI 3 CR STEEL

CUSTOMER :- NATIONAL-OILWELL B.V.
CUSTOMER ORDER No :- 6508902104
CONTRACT No :- 45300183
INTERNAL ITEM No :- 010
VALVE SERIAL No :- 45300183/010/1 & 2

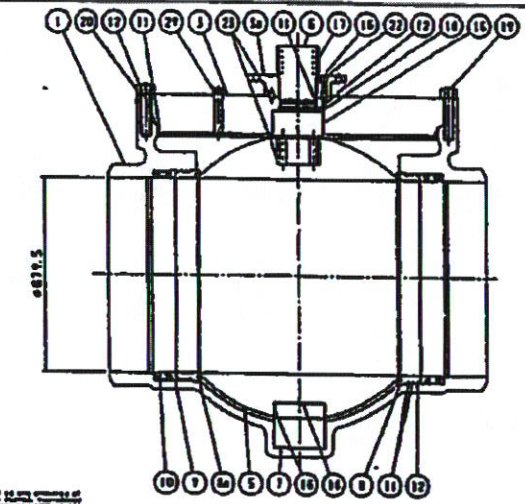

SERIAL No.	A	B	TAG No.
45300183/010/1	250	1346	00EAG10AA001
45300183/010/2	500	2346	00EAG10AA002

NOTES:
1. VALVE DESIGNED IN ACCORDANCE WITH API 6D
2. FIRESAFE DESIGN IN ACCORDANCE WITH API 6FA/BS6755 PART 2
3. FACE TO FACE DIMENSIONS TO API 6D
4. END CONNECTIONS - BUTT WELD TO B16.25
5. ALL DIMENSIONS & WEIGHTS ARE APPROXIMATE ONLY

APPROX. VALVE WEIGHT = 4144 Kg.

CLIENT: MINISTRY OF ELECTRICITY & WATER
POWER STATION AND DESALINATION PLANT PROJECTS
KUWAIT
POWER STATION PROJECTS
PROJECT: AZ ZOUR SOUTH
AND FUWAIHIN POWER STATION
CONSULTANT: PB Parsons Brinckerhoff International Inc.
CONTRACTOR: SIEMENS
Power Generation
AZ ZOUR SOUTH G.T.P.S.
Siemens AG Power Generation
HOPKINSONS LIMITED HUDDERSFIELD

MAC VALVES
TOP ENTRY
SOFT SEAT, TRUNNION MOUNTED
BALL VALVE. BUTT WELD ENDS
28" ASME 300

225D
403

DATE 28-08-03
SCALE -/-/-

ITEM NO: 11

312D/406

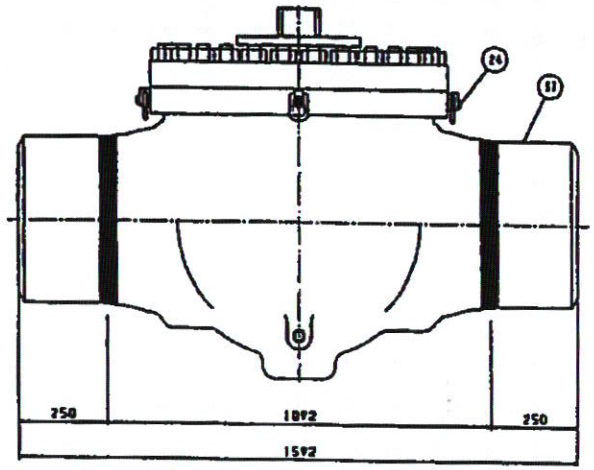

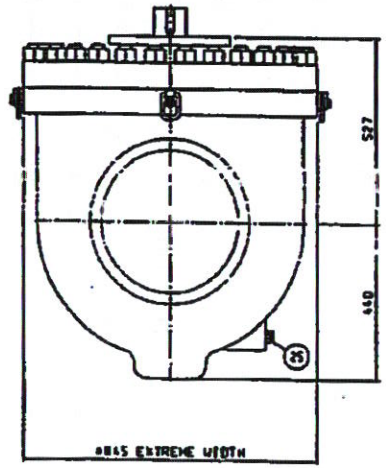

REF	NAME OF COMPONENT	MATERIAL	SPECIFICATION
1	BODY	[illegible]	[illegible]
3	BONNET	[illegible]	[illegible]
3a	FOLLOWING PIECE	[illegible]	[illegible]
4	BOLT	[illegible]	[illegible]
5	STUD	[illegible]	[illegible]
6	TRUNNION	[illegible]	[illegible]
8	SEAT	[illegible]	[illegible]
8A	SEAT INSERT	[illegible]	-
9	SEAT FOLLOWER	[illegible]	[illegible]
10	SPRINGS	[illegible]	-
11	BALL	[illegible]	-
12	FIRE SEAL	[illegible]	-
14	BEARINGS	[illegible]	-
17	NUT	[illegible]	[illegible]
18	THRUST WASHER	[illegible]	[illegible]
19	GLAND	[illegible]	[illegible]
20	NUTS	[illegible]	[illegible]
22	CAP SCREWS	[illegible]	[illegible]
23	DOWELS	[illegible]	[illegible]
24	LIFTING LUGS	[illegible]	-
25	DRAIN PLUG	[illegible]	[illegible]
26	BLEED VALVE	[illegible]	[illegible]
27	CAP PLATE		[illegible]

CUSTOMER :- NATIONAL-DILWELL B.V.
CUSTOMER ORDER No :- 65081021DH
CONTRACT No :- 45300183
INTERNAL ITEM No :- 020
VALVE SERIAL No :- 45300183/020/1&2
TAG No :- 00EG040AA001
00EG050AA001

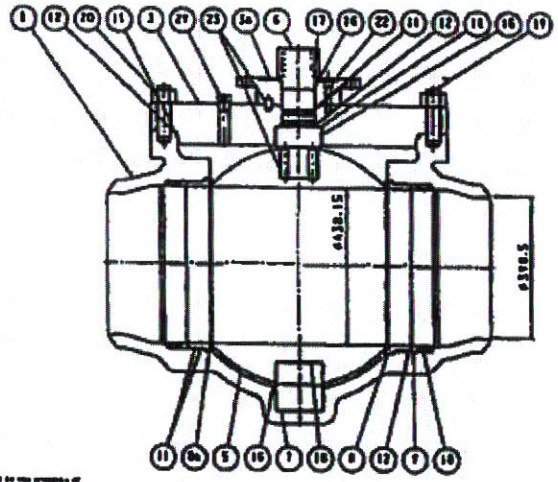

NOTES:
1. VALVE DESIGNED IN ACCORDANCE WITH API 6D
2. FIRESAFE DESIGN IN ACCORDANCE WITH API 6FA/BS6755 PART 2
3. FACE TO FACE DIMENSIONS TO API 6D
4. END CONNECTIONS - BUTT WELD TO B16.25
5. ALL DIMENSIONS & WEIGHTS ARE APPROXIMATE ONLY

APPROX. VALVE WEIGHT = 1925 KG

A		C
B		D

DATE 10-09-01	SCALE -/-/-
DRAWN PWH	CHECKED MHD
ISSUED	

© HOPKINSONS LIMITED HUDDERSFIELD

MAC VALVES
TOP ENTRY,
SOFT SEAT, TRUNNION MOUNTED,
BALL VALVE, BUTT WELD ENDS
18" ASME 600

312D
406

ITEM NO: 12

207D/401

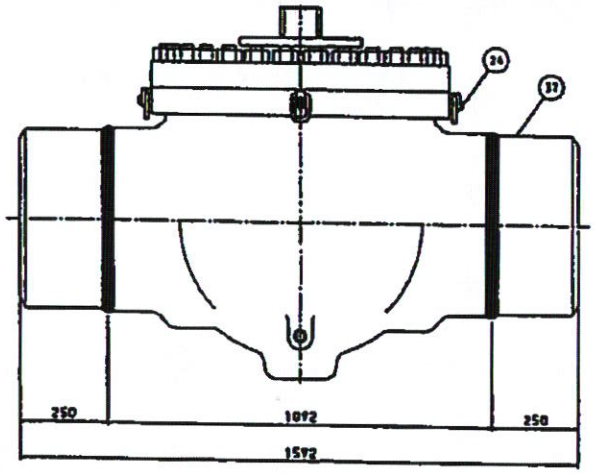

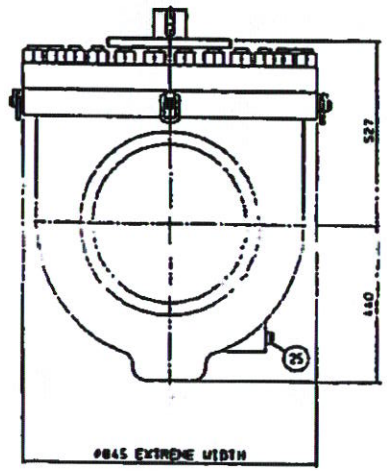

NO	NAME OF COMPONENT	MATERIAL	SPECIFICATION
1	BODY	[illegible]	[illegible]
2	BONNET	[illegible]	[illegible]
3a	MOUNTING PIECE	[illegible]	[illegible]
5	BALL	[illegible]	[illegible]
6	SEAT	[illegible]	[illegible]
7	TRUNNION	[illegible]	[illegible]
8	SEAT	[illegible]	[illegible]
9a	SEAT INSERT	[illegible]	[illegible]
9	SEAT FOLLOWER	[illegible]	[illegible]
10	SPRINGS	[illegible]	[illegible]
11	BEARING	[illegible]	[illegible]
12	FIRE SEAL	[illegible]	[illegible]
14	BUSHES	[illegible]	[illegible]
15	SEAT	[illegible]	[illegible]
16	THRUST WASHER	[illegible]	[illegible]
19	STUDS	[illegible]	[illegible]
20	NUTS	[illegible]	[illegible]
22	CAP SCREWS	[illegible]	[illegible]
23	SEALS	[illegible]	[illegible]
24	PLUG LEVER	[illegible]	[illegible]
25	BLEED PLUG	[illegible]	[illegible]
26	BLEED PLUG	[illegible]	[illegible]
27	CAP PLUG	[illegible]	[illegible]

CUSTOMER :- NATIONAL-OILWELL B.V.
CUSTOMER ORDER No :- 650890210H
CONTRACT No :- 45300183
INTERNAL ITEM No :- 030
VALVE SERIAL No :- 45300183/030/1
TAG No :- 00EG010AA001

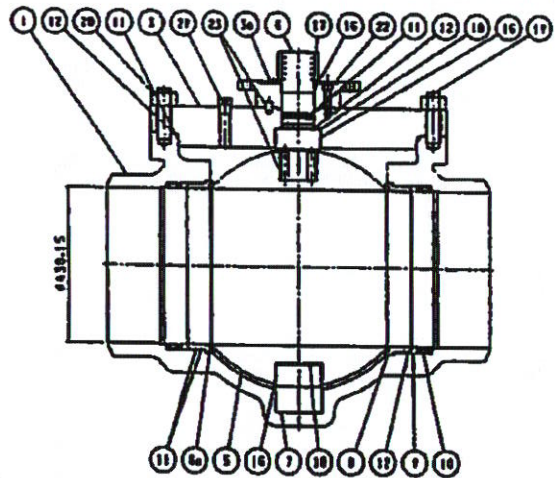

NOTES:
1. VALVE DESIGNED IN ACCORDANCE WITH API 6D
2. FIRESAFE DESIGN IN ACCORDANCE WITH API 6FA/BS6755 PART 2
3. FACE TO FACE DIMENSION TO API 6D
4. END CONNECTION - BUTT WELD TO [illegible]
5. ALL DIMENSIONS & WEIGHTS ARE APPROXIMATE ONLY

APPROX. VALVE WEIGHT = [illegible] KG

CLIENT: MINISTRY OF ELECTRICITY & WATER
POWER STATION AND DISTILLATION PLANT PROJECT
KUWAIT
POWER STATION PROJECTS
PROJECT: AL ZOUR SOUTH
AZS TURBINE POWER STATION
CONSULTANT: PB Power Engineering International Inc.
CONTRACT No: [illegible]
REV DWG. No: [illegible]
CONTRACTOR: SIEMENS
AL ZOUR SOUTH G.T.P.S.
TOP ENTRY, SOFT SEAT, TRUNNION MOUNTED BALL VALVE, BUTT WELD ENDS
18" ASME 150
REVISION NO: 0
DATE: [illegible]
DRAWING NO: 207D/401

REV	DATE	DESCRIPTION
A	[illegible]	[illegible]
B	[illegible]	[illegible]
C	[illegible]	[illegible]
D	[illegible]	[illegible]

DATE 26-09-01
SCALE 1/5
DRAWN [illegible]
CHECKED [illegible]
TRACED

© HOPKINSONS LIMITED HUDDERSFIELD

MAC VALVES
TOP ENTRY, SOFT SEAT, TRUNNION MOUNTED BALL VALVE, BUTT WELD ENDS
18" ASME 150

207D
401

ITEM NO: 13

FEATURES PICTORIALLY TYPICAL ORIENTATION MAY DIFFER

DWG. NO. MMM28872

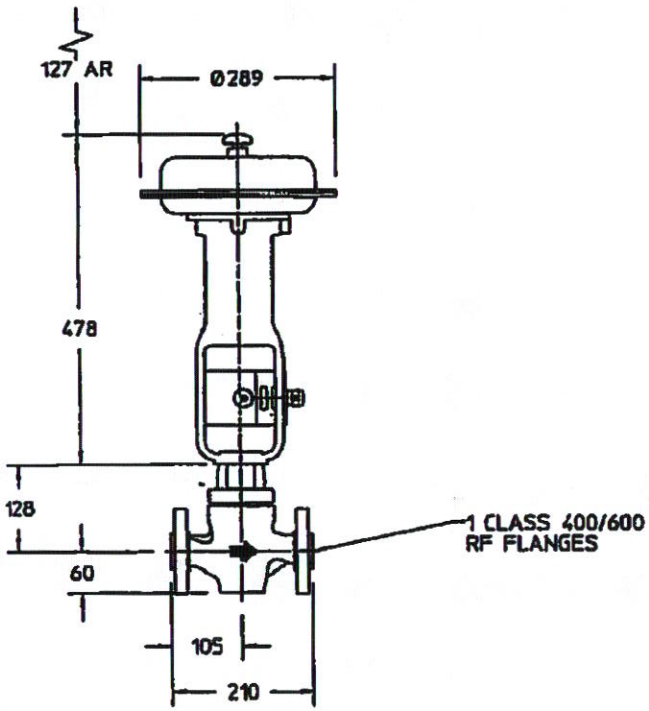

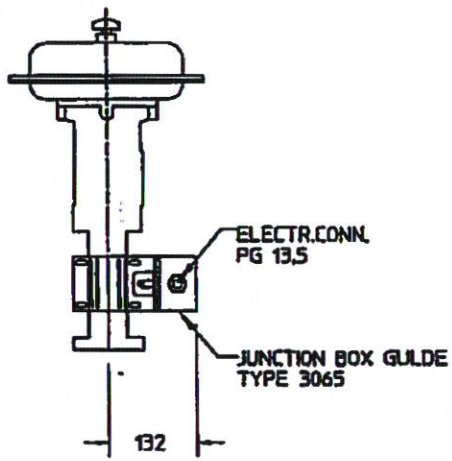

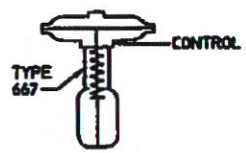

VALVE CLOSES ON AIR FAILURE

HP CAD

TOTAL CALCULATED ASSEMBLY WEIGHT +/- 10%:
33 kg

AR - ACTUATOR REMOVAL CLEARANCE

UNLESS OTHERWISE SPECIFIED:
UNIT OF MEASURE: MILLIMETER

DIMENSIONS ARE +/- 6

FACE TO FACE TOLERANCE PER ANSI

DIMENSIONS CERTIFIED CORRECT BY FISHER CONTROLS | DATE 11/24/03

CUST: ROTRING ENGINEERING GMBH
P. O. NO.: B03/000586
ORDER NO.: D97P045032
TAG NO.: |

SERIAL NO.: EU03362137 TO EU03362139

ACTUATOR 667 SIZE 30
VALVE EZ SIZE 1 CLASS 600

DWN.	ADS	11/24/03	
CHKD.	AOR	11/24/03	
APVD.	GOR	11/24/03	
HE10			
SCALE	NONE		

FISHER

Fisher Controls
Cernay, France

REVISIONS

ITEM 3362137 | 6

DWG. NO. MMM28872 | REV. A

© Fisher Controls 2003

ITEM NO: 14

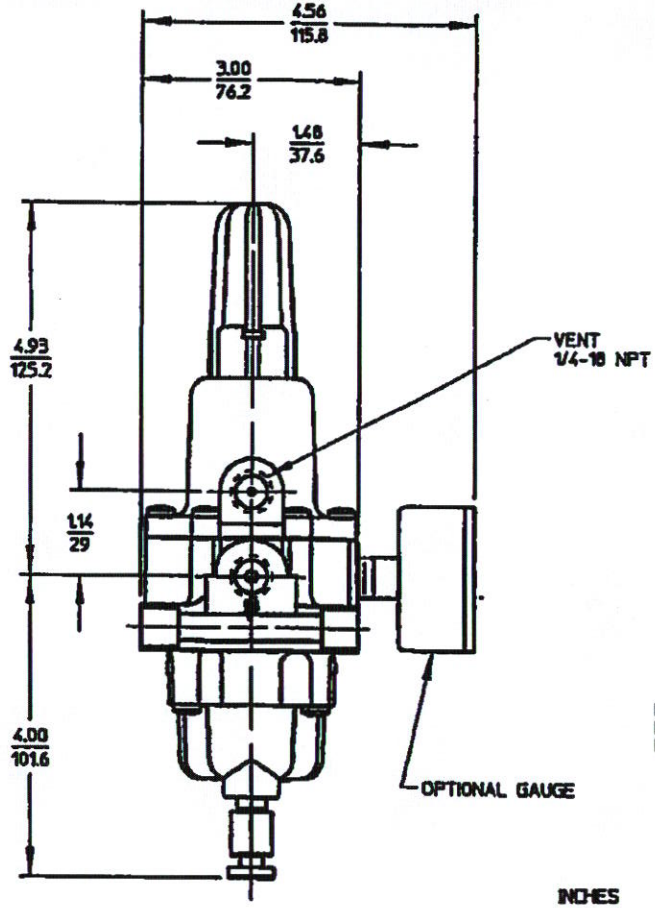

STANDARD DIMENSIONS

INCHES
mm

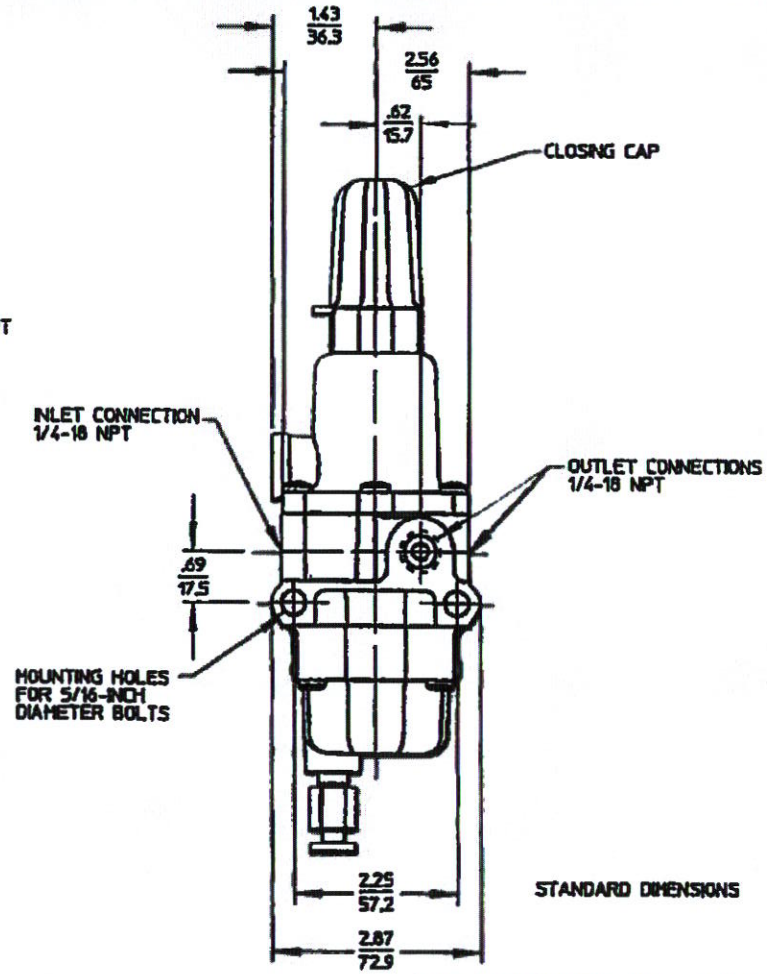

STANDARD DIMENSIONS

ENVELOPE DIMENSIONS ARE ± .25 (6.4)

UNLESS OTHERWISE SPECIFIED
TOLERANCE ± .25
SURFACE FINISH R_a
REMOVE BURRS AND SHARP CORNERS.R OR CHAM MAX
THREAD DRILL DEPTHS ARE MAX.
THREAD LENGTHS ARE FULL THREAD.
UNIT OF MEASURE
INCHES
DO NOT SCALE THIS DWG
ANSI Y14.5M-1982

© Fisher Controls 2003

FISHER
Fisher Controls
Marshalltown, Iowa

TYPE 67CFS OR 67CFSR
AIR FILTER REGULATOR
STANDARD CONSTRUCTION

DWG NO. GE03199
SCALE 2 = 1
REV. A

ITEM NO: 15

FISHER Fisher Controls | Fisher-Rosemount

Purpose of drawing is for dimensional reference only. | Total Assembly Weight: 1 kg ±10%

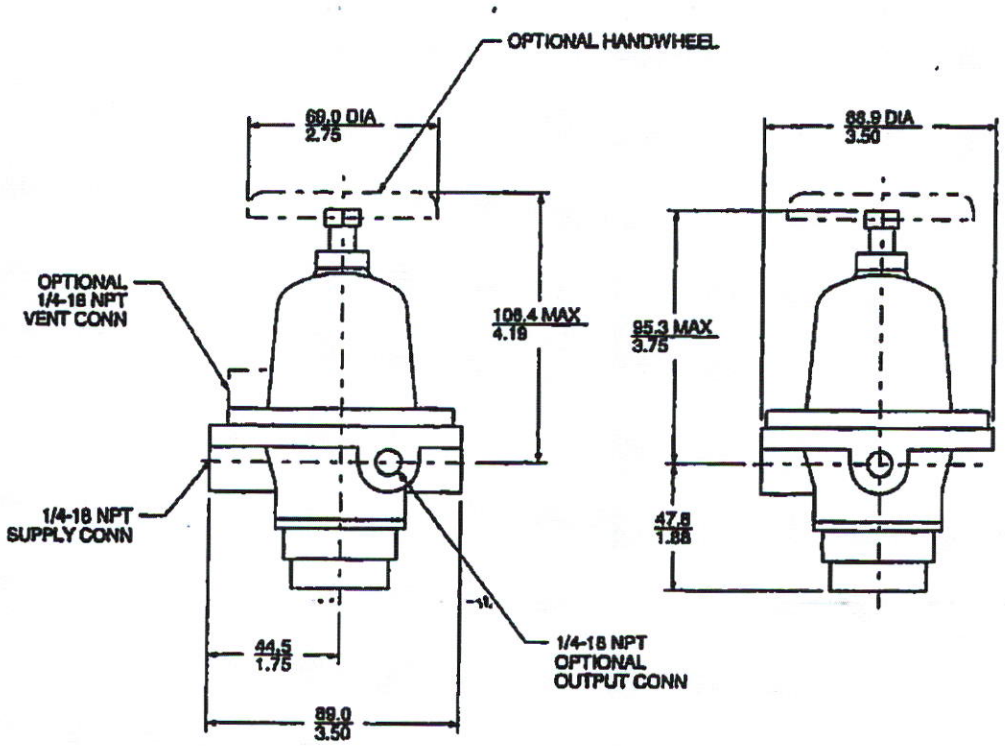

MATERIAL: STAINLESS STEEL/EDELSTAHL

Unit of Measure = mm, scale=none. Envelope Dimensions are +/- 6. Face to Face Tolerance per ANSI.

10/7/03 Drawing certified correct by Fisher Controls © 2003 Fisher Controls Intl. Inc. FISHER-ROSEMOUNT

1301F 1/4"-NPT	CUSTOMER:
	CUST REF #:
	TAG NO:
	FISHER REF #: -
	ITEM NO: 001 REV: sep 03-1.2.37-1.182-75-0

ITEM NO: 17

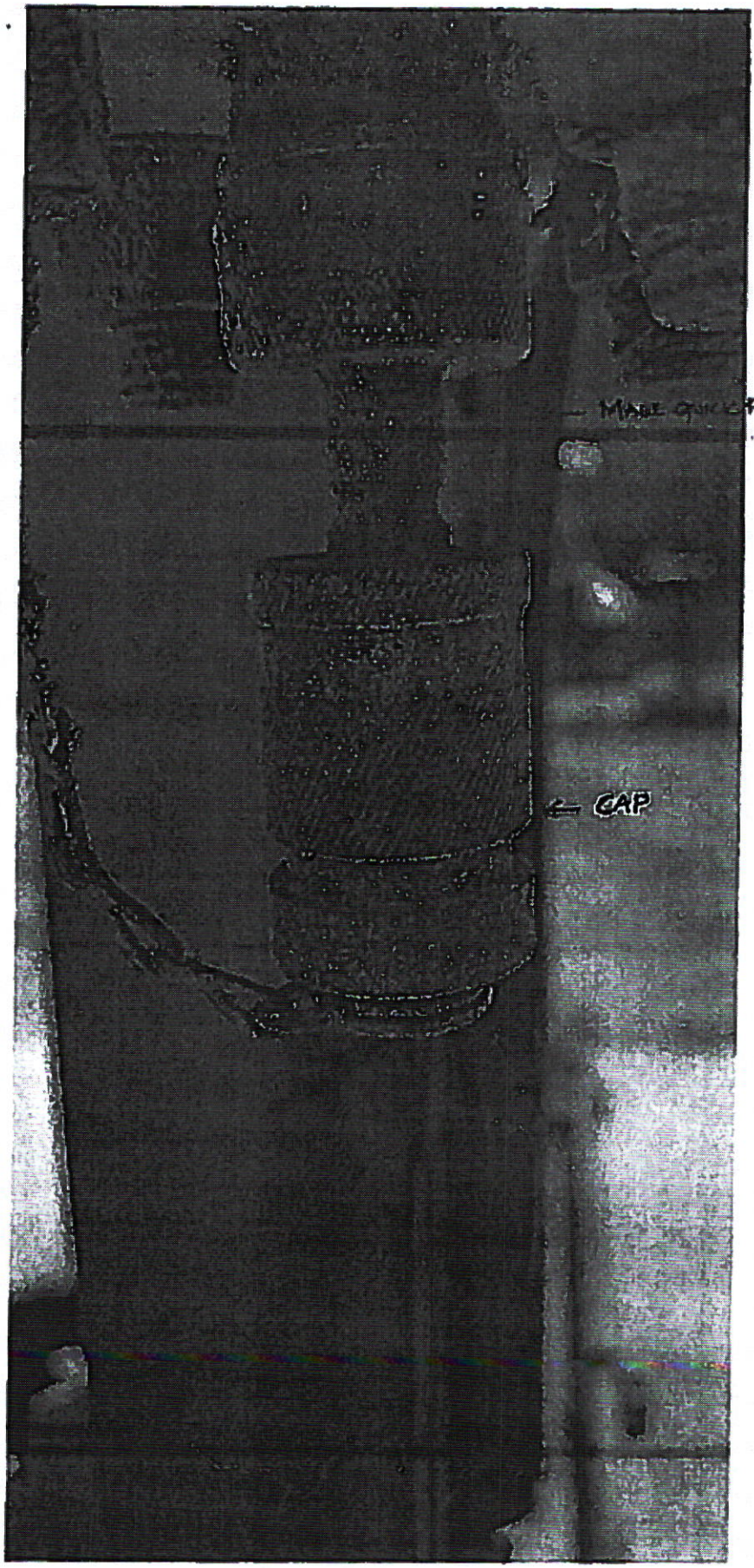

DRAWING NO. 16

طلب تزويد رقم | 23316 |

المواد المطلوبة تحتاج إلى ضمان

- [x] لا تحتاج إلى ضمان
- [ ] تحتاج إلى ضمان 6 شهور بعد التركيب والتشغيل
- [ ] تحتاج إلى ضمان 12 شهر بعد التركيب والتشغيل

ملاحظة : مع مراعاة أن يقوم المورد على نفقته الخاصة بتقديم كافة خدمات الدعم الفني بما يضمن استمرارية العمل دون توقف طبقاً لما ورد بطلب التزويد .

مهندس / خالد عبد الكريم الإبراهيم
رئيس الصيانة الميكانيكية

16 APR 2024
م. فيصل عباس الغريب
مراقب الصيانة الميكانيكية
محطة الزور الجنوبية

إعتماد الجهة الطالبة
م/ علي فاضل قاسم
إدارة محطة الزور الجنوبية
21 APR 2024

م. ناصر طليحان العطيري
نائب التنفيذي
الزور